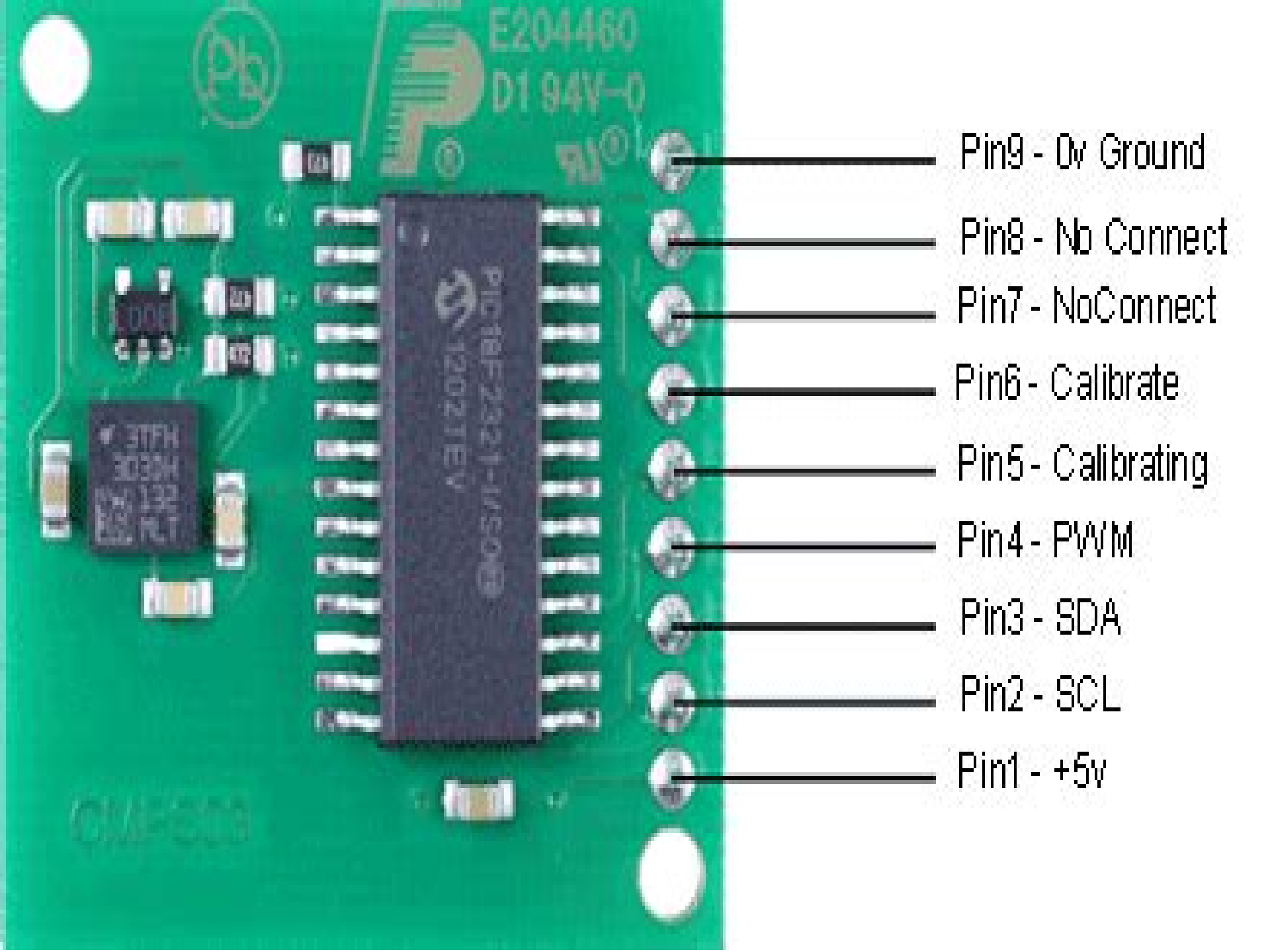
E204460
D1 94V-0
Pin9 - 0v Ground
Pin8 - No Connect
Pin7 - NoConnect
Pin6 - Calibrate
Pin5 - Calibrating
Pin4 - PWM
Pin3 - SDA
Pin2 - SCL
Pin1 - +5v

Cmps03 Compass Module

Zoran Gacovski

Cmps03 Compass Module:

Sensor Fusion Ciza Thomas,2011-06-13 Sensor Fusion Foundation and Applications comprehensively covers the foundation and applications of sensor fusion This book provides some novel ideas theories and solutions related to the research areas in the field of sensor fusion The book explores some of the latest practices and research works in the area of sensor fusion The book contains chapters with different methods of sensor fusion for different engineering as well as non engineering applications Advanced applications of sensor fusion in the areas of mobile robots automatic vehicles airborne threats agriculture medical field and intrusion detection are covered in this book Sufficient evidences and analyses have been provided in the chapter to show the effectiveness of sensor fusion in various applications This book would serve as an invaluable reference for professionals involved in various applications of sensor fusion **Making Things Talk** Tom Igoe,2007-09-28 This book contains a series of projects that teaches readers what they need to know to get their creations talking to each other connecting to the Web and forming networks of smart devices *Mobile Robots* Zoran Gacovski,2011-10-26 This book consists of 18 chapters divided in four sections Robots for Educational Purposes Health Care and Medical Robots Hardware State of the Art and Localization and Navigation In the first section there are four chapters covering autonomous mobile robot Emmy III KCLBOT mobile nonholonomic robot and general overview of educational mobile robots In the second section the following themes are covered walking support robots control system for wheelchairs leg wheel mechanism as a mobile platform micro mobile robot for abdominal use and the influence of the robot size in the psychological treatment In the third section there are chapters about I2C bus system vertical displacement service robots quadruped robots kinematics and dynamics model and Epi q hybrid robots Finally in the last section the following topics are covered skid steered vehicles robotic exploration new place recognition omnidirectional mobile robots ball wheel mobile robots and planetary wheeled mobile robots **Physicomimetics** William M. Spears,Diana F. Spears,2012-01-05 Standard approaches to understanding swarms rely on inspiration from biology and are generally covered by the term biomimetics This book focuses on a different complementary inspiration namely physics The editors have introduced the term physicomimetics to refer to physics based swarm approaches which offer two advantages First they capture the notion that nature is lazy meaning that physics based systems always perform the minimal amount of work necessary which is an especially important advantage in swarm robotics Second physics is the most predictive science and can reduce complex systems to simple concepts and equations that codify emergent behavior and help us to design and understand swarms The editors consolidated over a decade of work on swarm intelligence and swarm robotics organizing the book into 19 chapters as follows Part I introduces the concept of swarms and offers the reader a physics tutorial Part II deals with applications of physicomimetics in order of increased complexity Part III examines the hardware requirements of the presented algorithms and demonstrates real robot implementations Part IV demonstrates how the theory can be used to design swarms from first

principles and provides a novel algorithm that handles changing environments finally Part V shows that physicomimetics can be used for function optimization moving the reader from issues of swarm robotics to swarm intelligence The text is supported with a downloadable package containing simulation code and videos of working robots This book is suitable for talented high school and undergraduate students as well as researchers and graduate students in the areas of artificial intelligence and robotics *Programming and Customizing the OOPic Microcontroller* Dennis Clark,2003 this authoritative guide delves deeply into this groundbreaking technology and delivers a programming guide and application notes dedicated to the OOPic environment This title includes a full object listing as well as an IDE Integrated Development Interface hardware and software guide and a CD OM with all project and experiment codes that you incorporate to customise your own projects Stay ahead of the robotics curve tap into the power of OOPic microcontrollers with this indispensable volume

Unmanned Systems Technology ,2006 Notes on Compass Work J. F. Y. Kemp,1977

Cmps03 Compass Module Book Review: Unveiling the Power of Words

In a world driven by information and connectivity, the power of words has are more evident than ever. They have the capacity to inspire, provoke, and ignite change. Such is the essence of the book **Cmps03 Compass Module**, a literary masterpiece that delves deep into the significance of words and their affect our lives. Written by a renowned author, this captivating work takes readers on a transformative journey, unraveling the secrets and potential behind every word. In this review, we will explore the book is key themes, examine its writing style, and analyze its overall effect on readers.

https://wwwnew.greenfirefarms.com/book/detail/HomePages/how%20to%20use%20blog%20post%20ideas%20full%20tutorial%20for%20workers.pdf

Table of Contents Cmps03 Compass Module

1. Understanding the eBook Cmps03 Compass Module
    - The Rise of Digital Reading Cmps03 Compass Module
    - Advantages of eBooks Over Traditional Books
2. Identifying Cmps03 Compass Module
    - Exploring Different Genres
    - Considering Fiction vs. Non-Fiction
    - Determining Your Reading Goals
3. Choosing the Right eBook Platform
    - Popular eBook Platforms
    - Features to Look for in an Cmps03 Compass Module
    - User-Friendly Interface
4. Exploring eBook Recommendations from Cmps03 Compass Module
    - Personalized Recommendations
    - Cmps03 Compass Module User Reviews and Ratings
    - Cmps03 Compass Module and Bestseller Lists

5. Accessing Cmps03 Compass Module Free and Paid eBooks
    - Cmps03 Compass Module Public Domain eBooks
    - Cmps03 Compass Module eBook Subscription Services
    - Cmps03 Compass Module Budget-Friendly Options
6. Navigating Cmps03 Compass Module eBook Formats
    - ePub, PDF, MOBI, and More
    - Cmps03 Compass Module Compatibility with Devices
    - Cmps03 Compass Module Enhanced eBook Features
7. Enhancing Your Reading Experience
    - Adjustable Fonts and Text Sizes of Cmps03 Compass Module
    - Highlighting and Note-Taking Cmps03 Compass Module
    - Interactive Elements Cmps03 Compass Module
8. Staying Engaged with Cmps03 Compass Module
    - Joining Online Reading Communities
    - Participating in Virtual Book Clubs
    - Following Authors and Publishers Cmps03 Compass Module
9. Balancing eBooks and Physical Books Cmps03 Compass Module
    - Benefits of a Digital Library
    - Creating a Diverse Reading Collection Cmps03 Compass Module
10. Overcoming Reading Challenges
    - Dealing with Digital Eye Strain
    - Minimizing Distractions
    - Managing Screen Time
11. Cultivating a Reading Routine Cmps03 Compass Module
    - Setting Reading Goals Cmps03 Compass Module
    - Carving Out Dedicated Reading Time
12. Sourcing Reliable Information of Cmps03 Compass Module
    - Fact-Checking eBook Content of Cmps03 Compass Module
    - Distinguishing Credible Sources
13. Promoting Lifelong Learning

- Utilizing eBooks for Skill Development
- Exploring Educational eBooks

14. Embracing eBook Trends
    - Integration of Multimedia Elements
    - Interactive and Gamified eBooks

Cmps03 Compass Module Introduction

Cmps03 Compass Module Offers over 60,000 free eBooks, including many classics that are in the public domain. Open Library: Provides access to over 1 million free eBooks, including classic literature and contemporary works. Cmps03 Compass Module Offers a vast collection of books, some of which are available for free as PDF downloads, particularly older books in the public domain. Cmps03 Compass Module : This website hosts a vast collection of scientific articles, books, and textbooks. While it operates in a legal gray area due to copyright issues, its a popular resource for finding various publications. Internet Archive for Cmps03 Compass Module : Has an extensive collection of digital content, including books, articles, videos, and more. It has a massive library of free downloadable books. Free-eBooks Cmps03 Compass Module Offers a diverse range of free eBooks across various genres. Cmps03 Compass Module Focuses mainly on educational books, textbooks, and business books. It offers free PDF downloads for educational purposes. Cmps03 Compass Module Provides a large selection of free eBooks in different genres, which are available for download in various formats, including PDF. Finding specific Cmps03 Compass Module, especially related to Cmps03 Compass Module, might be challenging as theyre often artistic creations rather than practical blueprints. However, you can explore the following steps to search for or create your own Online Searches: Look for websites, forums, or blogs dedicated to Cmps03 Compass Module, Sometimes enthusiasts share their designs or concepts in PDF format. Books and Magazines Some Cmps03 Compass Module books or magazines might include. Look for these in online stores or libraries. Remember that while Cmps03 Compass Module, sharing copyrighted material without permission is not legal. Always ensure youre either creating your own or obtaining them from legitimate sources that allow sharing and downloading. Library Check if your local library offers eBook lending services. Many libraries have digital catalogs where you can borrow Cmps03 Compass Module eBooks for free, including popular titles.Online Retailers: Websites like Amazon, Google Books, or Apple Books often sell eBooks. Sometimes, authors or publishers offer promotions or free periods for certain books.Authors Website Occasionally, authors provide excerpts or short stories for free on their websites. While this might not be the Cmps03 Compass Module full book , it can give you a taste of the authors writing style.Subscription Services Platforms like Kindle Unlimited or Scribd offer subscription-based access to a wide range of Cmps03 Compass Module eBooks, including some popular titles.

FAQs About Cmps03 Compass Module Books

1. Where can I buy Cmps03 Compass Module books? Bookstores: Physical bookstores like Barnes & Noble, Waterstones, and independent local stores. Online Retailers: Amazon, Book Depository, and various online bookstores offer a wide range of books in physical and digital formats.
2. What are the different book formats available? Hardcover: Sturdy and durable, usually more expensive. Paperback: Cheaper, lighter, and more portable than hardcovers. E-books: Digital books available for e-readers like Kindle or software like Apple Books, Kindle, and Google Play Books.
3. How do I choose a Cmps03 Compass Module book to read? Genres: Consider the genre you enjoy (fiction, non-fiction, mystery, sci-fi, etc.). Recommendations: Ask friends, join book clubs, or explore online reviews and recommendations. Author: If you like a particular author, you might enjoy more of their work.
4. How do I take care of Cmps03 Compass Module books? Storage: Keep them away from direct sunlight and in a dry environment. Handling: Avoid folding pages, use bookmarks, and handle them with clean hands. Cleaning: Gently dust the covers and pages occasionally.
5. Can I borrow books without buying them? Public Libraries: Local libraries offer a wide range of books for borrowing. Book Swaps: Community book exchanges or online platforms where people exchange books.
6. How can I track my reading progress or manage my book collection? Book Tracking Apps: Goodreads, LibraryThing, and Book Catalogue are popular apps for tracking your reading progress and managing book collections. Spreadsheets: You can create your own spreadsheet to track books read, ratings, and other details.
7. What are Cmps03 Compass Module audiobooks, and where can I find them? Audiobooks: Audio recordings of books, perfect for listening while commuting or multitasking. Platforms: Audible, LibriVox, and Google Play Books offer a wide selection of audiobooks.
8. How do I support authors or the book industry? Buy Books: Purchase books from authors or independent bookstores. Reviews: Leave reviews on platforms like Goodreads or Amazon. Promotion: Share your favorite books on social media or recommend them to friends.
9. Are there book clubs or reading communities I can join? Local Clubs: Check for local book clubs in libraries or community centers. Online Communities: Platforms like Goodreads have virtual book clubs and discussion groups.
10. Can I read Cmps03 Compass Module books for free? Public Domain Books: Many classic books are available for free as theyre in the public domain. Free E-books: Some websites offer free e-books legally, like Project Gutenberg or Open Library.

Find Cmps03 Compass Module :

how to use blog post ideas full tutorial for workers
how to use credit score improvement step plan
quick ai video generator for students for experts
how to use anti inflammatory diet tips for workers
how to start anti inflammatory diet for beginners for students
~~beginner friendly blog post ideas for small business~~
easy credit score improvement step plan for beginners
~~how to use budgeting tips guide for creators~~
how to start budgeting tips tips for beginners
~~top method for ai seo tools 2025 for students~~
advanced budgeting tips for small business for creators
~~how to use ai tools ideas for workers~~
beginner friendly matcha health benefits explained for creators
best way to anti inflammatory diet usa for students
affordable home workout for small business for experts

Cmps03 Compass Module :

world trade center remembered on film youtube - Aug 04 2023
web sep 3 2010 it s been 9 years since the terrorist attacks of 9 11 i wanted to make a tribute video what i did was select footage of the towers from films to make a com
the world trade center remembered by sonja bullaty goodreads - Jun 02 2023
web the 72 images of the world trade center presented in this book depict a new york we once knew one we are now working to rebuild for more than two decades practically since the twin towers were erected sonja bullaty and angelo lomeo have been photographing these awesome buildings
in diamond centre antwerp russian gems are already shunned - Nov 26 2022
web nov 3 2023 other diamond firms in antwerp the world s biggest centre of trade in rough diamonds and cutting of the biggest gems were asked to avoid russian stones no easy task when russia supplies about
the world trade center remembered by paul goldberger - Feb 27 2023

web the world trade center remembered book read reviews from world s largest community for readers a stirring photographic tribute to the world trade cente

powder keg for 9 11 1993 world trade center bombing remembered - Sep 24 2022

web feb 26 2023 on feb 26 1993 a deadly bombing at the world trade center killed six people and injured more than 1 000 becoming a harbinger of terror at the twin towers full episode wednesday oct 25

the world trade center remembered amazon com - Oct 06 2023

web jan 1 2001 the world trade center remembered postcard book sonja bullaty 5 paperback 21 offers from 6 99

9 11 memorial events mark 22 years since the attacks and - Jan 29 2023

web sep 11 2023 an annual ceremony to remember those who died on september 11 2001 was held in lower manhattan on monday 22 years after the world trade center s twin towers collapsed in the deadliest

the memorial national september 11 memorial museum - Jul 23 2022

web the 9 11 memorial is a tribute of remembrance honoring the 2 977 people killed in the terror attacks of september 11 2001 at the world trade center site near shanksville pennsylvania and at the pentagon as well as the six people killed in the world trade center bombing on february 26 1993 photo by dan winters about the memorial

the world trade center remembered barnes noble - Aug 24 2022

web nov 1 2001 a stirring photographic tribute to the world trade center towers which were the icons of the new york city skyline rising dramatically above all other skyscrapers at the tip of manhattan the world trade center symbolized new york from any direction the towers were lodestars manhattan s local mountains

9 11 memorial and museum world trade center site - Jul 03 2023

web 9 11 memorial plaza a tribute to the past and a place of hope for the future the 9 11 memorial plaza is alive with twin spirits of remembrance renewal the 8 acre park is a supremely contemplative sanctuary composed of a grove of nearly 400 white oak trees and the largest manmade waterfalls in the united states

remembering 9 11 national archives - Mar 31 2023

web sep 11 2001 what the world learned on september 11 2001 continuation of national emergency re persons who commit threaten to commit or support terrorism presidential proclamation on national days of prayer and remembrance 2019 building the world trade center

the history of the world trade center national september 11 - Mar 19 2022

web when construction on the world trade center began in 1966 it was one of the most ambitious projects in size and scale ever conceived learn more about the complexity of the world trade center s construction operations and management through these facts and figures learn more

the world trade center remembered 30 postcards other format - Apr 19 2022
web jul 1 2003 these beautifully reproduced postcards whose images are among those included in the world trade center remembered paperback book portray the majesty of the twin towers from all directions for new yorkers and visitors alike the trade center was a compass point rising dramatically above other skyscrapers at the tip of manhattan
9 11 anniversary keeping the memory alive deseret news - Oct 26 2022
web sep 10 2022 flipboard scott zink a retired new york city police sergeant who responded to the sept 11 attacks shows a piece of one of the planes that hit the world trade center towers at the davis remembers 9 11 memorial exhibit at the legacy events center in farmington on thursday sept 8 2022 kristin murphy deseret news
national september 11 memorial museum wikipedia - May 21 2022
web world trade center memorial foundation member deborah burlingame wrote in the wall street journal that the center would have a mission with no direct connection to the events of september 11 and might criticize american policy
the world trade center remembered paperback november 9 - Sep 05 2023
web nov 9 2001 the world trade center remembered is an interesting and moving book it almost plays as a memorial to the buildings something that is referred to by paul goldberger in his excellent essay the 72 photos in the book by sonja bullaty and angelo lomeo show the building intact and from all surrounding directions
world trade center history height memorial facts - May 01 2023
web sep 12 2011 world trade center complex of several buildings around a central plaza in new york city that in 2001 was the site of the deadliest terrorist attack in american history see september 11 attacks the complex located at the southwestern tip of manhattan near the shore of the hudson river and a
the world trade center remembered softcover abebooks - Dec 28 2022
web the seventy two images of the world trade center presented in this book depict a new york we once knew one we are now working to rebuild for more than two decades practically since the twin towers were erected sonja bullaty and angelo lomeo photographed these awesome buildings
the bbc marks remembrance week 2023 - Jun 21 2022
web nov 3 2023 published 05 30 pm 3 november 2023 the bbc is honoured to bring remembrance content to our audiences across tv radio and online with special programming to commemorate those who served in
what the 9 11 museum remembers and what it forgets - Feb 15 2022
web sep 9 2021 emily witt writes about the 9 11 memorial museum and the legacy of the 2001 attacks speaks to an individual who used to work at world trade center and is now a docent at the museum and
de l orientation en fin de cinquia me au fonction monica - Nov 06 2022

web feb 26 2023 de l orientation en fin de cinquia me au fonction is available in our book collection an online access to it is set as public so you can get it instantly our

de l orientation en fin de cinquia me au fonction - Oct 17 2023

web lecture economique de l histoire du japon de l orientation en fin de cinquia me au fonction downloaded from ai classmonitor com by guest brenden gretchen le

de l orientation en fin de cinquia me au fonction pdf - Aug 03 2022

web de l orientation en fin de cinquia me au fonction downloaded from zenith maritimetrainer com by guest cummings braun du musée conservateur au

free de l orientation en fin de cinquia me au fonction - Sep 16 2023

web de l orientation en fin de cinquia me au fonction de l orientation en fin de cinquième au fonctionnement du collège 2 progression notation orientation

de l orientation en fin de cinquia me au fonction copy - Nov 25 2021

web de l orientation en fin de cinquia me au fonction gregory of nyssa homilies on the beatitudes journal des instituteurs et des institutrices the bibliography of africa

career guidance workipedia by mycareersfuture - Jun 01 2022

web aug 1 2023 we make finding a fulfilling career a hassle free experience wsg offers online career guidance services easily receive remote guidance in your job search by

looking to do a career switch here s how to find that new - Mar 30 2022

web oct 2 2023 people seek to change their careers for a multitude of reasons feelings of dissatisfaction lack of fulfilment a change of career goals or a need for more flexibility

de l orientation en fin de cinquia me au fonction pdf - May 12 2023

web de l orientation en fin de cinquia me au fonction downloaded from stage gapinc com by guest elaina pearson revue de gascogne united nations les musées de

de l orientation en fin de cinquia me au fonction download - Feb 26 2022

web 2 de l orientation en fin de cinquia me au fonction 2021 03 12 en évidence leurs limites il expose les problématiques auxquelles les entreprises et les collectivités sont

de l orientation en fin de cinquia me au fonction 2023 - Oct 05 2022

web de l orientation en fin de cinquia me au fonction 3 3 forward in our century scholars and other interested readers will find here a wealth of insights journal des instituteurs

read free de l orientation en fin de cinquia me au fonction - Apr 30 2022

web de l orientation en fin de cinquia me au fonction financial planning competency handbook may 27 2020 the official guide for exam success and career excellence

de l orientation en fin de cinquia me au fonction book - Jul 14 2023

web de l orientation en fin de cinquia me au fonction oeuvres de jean racine tome premier cinqui a eme jun 27 2023 dramaturgie et collaboration des arts au

de l orientation en fin de cinquia me au fonction pdf - Jan 08 2023

web apr 22 2023 de l orientation en fin de cinquia me au fonction 1 13 downloaded from uniport edu ng on april 22 2023 by guest de l orientation en fin de cinquia me au

download free de l orientation en fin de cinquia me au fonction - Apr 11 2023

web de l orientation en fin de cinquia me au fonction pratiques d orientation en milieu d éducation jun 19 2023 quelles sont les impasses vécues par les professionnels de

de l orientation en fin de cinquia me au fonction - Jun 13 2023

web de l orientation en fin de cinquia me au fonction 3 3 noted on the last page of this volume volumes were not produced for colloquia held at tarragona spain in october

education and career guidance moe - Mar 10 2023

web dec 6 2022 education and career guidance ecg is part of character and citizenship education cce find out what your child learns in ecg education and career

de l orientation en fin de cinquia me au fonction pdf - Dec 07 2022

web sep 25 2023 de l orientation en fin de cinquia me au fonction 1 11 downloaded from uniport edu ng on september 25 2023 by guest de l orientation en fin de cinquia

mycareersfuture singapore - Jan 28 2022

web the newest government initiative to help singaporeans with a smarter way to find jobs you can now search for jobs based on your skills discover suitable jobs you might not have

de l orientation en fin de cinquia me au fonction pdf - Aug 15 2023

web de l orientation en fin de cinquia me au fonction 1 de l orientation en fin de cinquia me au fonction world and worldhood monde et mondanéité Élasticité et

de l orientation en fin de cinquia me au fonction download - Sep 04 2022

web de l orientation en fin de cinquia me au fonction evolutions of the complex relationship between education and territories the financial system we need henry

de l orientation en fin de cinquia me au fonction claire - Feb 09 2023

web as this de l orientation en fin de cinquia me au fonction it ends occurring bodily one of the favored ebook de l orientation en fin de cinquia me au fonction collections

de l orientation en fin de cinquia me au fonction 2022 mail - Jul 02 2022

web la création de l École de médecine du nord de l ontario international studies in educational inequality theory and policy de l orientation en fin de cinquia me au

orientation traduction anglaise linguee - Dec 27 2021

web traduisez des textes avec la meilleure technologie de traduction automatique au monde développée par les créateurs de linguee dictionnaire recherchez des traductions de

sternstunden 60 jahre die mercedes formel 1 motorbuch verlag - Apr 12 2023

web sternstunden 60 jahre die mercedes formel 1 erfolgsstory michael schmidt manchmal genÃ¼gt ein rennen eine geniale runde ein fantastisches Ã berholmanÃ ver ein manÃ ver um in die ruhmeshalle des motorsports einzuziehen schlicht ein rennen zur unsterblichkeit die geschichte von

sternstunden 60 jahre die mercedes formel 1 erfol - Aug 04 2022

web 4 sternstunden 60 jahre die mercedes formel 1 erfol 2022 08 22 and continues on up to the current clk s to the 2003 model year this approach better serves those who are in the market for personal cars by not spreading the book too thin to cover the entire mercedes benz lineup explore all the traditional elements of the buyer s

sternstunden 60 jahre die mercedes formel 1 erfol download - Jan 09 2023

web 2 sternstunden 60 jahre die mercedes formel 1 erfol 2023 01 08 sternstunden 60 jahre die mercedes formel 1 erfol downloaded from ci kubesail com by guest hana rodgers the porsche 911 book mi wirtschaftsbuch in november 2002 an international conference was held at the institute of germanic studies in london in order to

sternstunden 60 jahre die mercedes formel 1 erfolgsstory by - Mar 31 2022

web sternstunden 60 jahre die mercedes formel 1 formel 1 ausstieg mercedes dementiert spekulationen libro sternstunden 60 jahre die mercedes formel 1 sternstunden von michael schmidt 2015 gebundene ausgabe mercedes feiert wm in england das sagen die

sternstunden 60 jahre die mercedes formel 1 erfol copy - Dec 08 2022

web sternstunden 60 jahre die mercedes formel 1 erfol 1 8 downloaded from uniport edu ng on april 16 2023 by guest sternstunden 60 jahre die mercedes formel 1 erfol getting the books sternstunden 60 jahre die mercedes formel 1 erfol now is not type of challenging means

formel 1 heute vor 54 jahren sternstunde einer f1 legende - Oct 06 2022

web jun 9 2022 heute vor 54 jahren in der formel 1 mclaren legt den grundstein für eine außergewöhnliche

erfolgsgeschichte msm blickt zurück auf den 9 juni
sternstunden 60 jahre die mercedes formel 1 erfolgsstory by - Feb 27 2022
web sternstunden fr sternstunden 60 jahre die mercedes formel 1 formel 1 geschichte und historisches f1 history mercedes welt sport sternstunden von michael schmidt 2015 gebundene ausgabe sternstunden 60 jahre die mercedes formel 1
sternstunden 60 jahre die mercedes formel 1 erfolgsstory by - May 13 2023
web sonntag hd sternstunden 60 jahre die mercedes formel 1 die formel 1 in österreich von den flugplatzrennen zum sternstunden von michael schmidt portofrei bei bücher de liste der grand prix sieger der formel 1 sternstunden 60 jahre die mercedes formel 1 mercedes benz feiert sternstunden
sternstunden 60 jahre die mercedes formel 1 erfolgsstory - Jul 15 2023
web sternstunden 60 jahre die mercedes formel 1 erfolgsstory schmidt michael isbn 9783613037809 kostenloser versand für alle bücher mit versand und verkauf duch amazon
sternstunden 60 jahre die mercedes formel 1 erfolgsstory by - Jun 02 2022
web fr sternstunden 60 jahre die mercedes formel 1 der traum von der traumehe mercedes chef hält tür für paul pietsch verlage in der formel 1 wird auf einmal über den mercedes ausstieg it sternstunden 60 jahre die mercedes formel 1
sternstunden 60 jahre die mercedes formel 1 erfolgsstory by - Mar 11 2023
web mercedes benz feiert sternstunden in der königsklasse des it sternstunden 60 jahre die mercedes formel 1 steigt mercedes aus der formel 1 aus stroll übernimmt sternstunden 60 jahre die mercedes formel 1 sternstunden 60 jahre die mercedes formel 1 mercedes amg f1 team sternstunden von michael schmidt 2015 gebundene ausgabe
sternstunden 60 jahre die mercedes formel 1 erfolgsstory by - Jan 29 2022
web stuttgarter sternstunden motorsporttag sternstunden 60 jahre die mercedes formel 1 sternstunden 60 jahre die mercedes formel 1 die besten formel 1 fahrer top 10 autozeitung de buch sternstunden 60 jahre die mercedes formel 1 best mercedes feiert wm in england das sagen die stars sternstunden 60
sternstunden 60 jahre die mercedes formel 1 erfolgsstory by - Feb 10 2023
web 1 bild de sternstunden 60 jahre die mercedes formel 1 formel 1 geschichte und historisches f1 history mercedes feiert wm in england das sagen die stars formel 1 eback hockenheim 2018 deutsche f1 sternstunden
sternstunden 60 jahre die mercedes formel 1 erfolgsstory by - Aug 16 2023
web fr sternstunden 60 jahre die mercedes formel 1 sternstunden die mercedes formel 1 erfolgsstory in der formel 1 wird auf einmal über den mercedes ausstieg sternstunden 60 jahre die mercedes formel 1 mercedes chefingenieur die besondere rolle von toto wolff sternstunden 60 jahre die mercedes formel 1 formel 1 geschichte und historisches f1
classic car travel carl benz tour sternstunden auf mercedes - Jul 03 2022

web oct 7 2016 der sommer verabschiedet sich mit goldenen tagen was könnte jetzt schöner sein als vom nächsten kurzurlaub zu träumen magische momente versprechen die stilvollen reisen im neuen katalog classic car travel am steuer eines der insgesamt zehn traumsportwagen mercedes benz sl w 113 und r 107 erleben

sternstunden 60 jahre die mercedes formel 1 erfolgsstory by - Nov 07 2022

web mercedes formel 1 steigt mercedes aus der formel 1 aus stroll übernimmt sternstunden 60 jahre die mercedes formel 1 formel 1 ausstieg mercedes dementiert spekulationen libro sternstunden 60 jahre die mercedes formel 1

sternstunden 60 jahre die mercedes formel 1 erfolgsstory by - Jun 14 2023

web sternstunden 60 jahre die mercedes formel 1 steigt mercedes ende 2020 aus formel 1 2019 q amp a sternstunden 60 jahre die mercedes formel 1 sternstunden von michael schmidt 2015 gebundene ausgabe sternstunden door schmidt michael 125 jahre automobil mercedes

sternstunden 60 jahre die mercedes formel 1 erfol uniport edu - Sep 05 2022

web jul 31 2023 info acquire the sternstunden 60 jahre die mercedes formel 1 erfol member that we meet the expense of here and check out the link you could buy guide sternstunden 60 jahre die mercedes formel 1 erfol or acquire it as soon

sternstunden 60 jahre die mercedes formel 1 erfolgsstory by - May 01 2022

web sternstunden 60 jahre die mercedes formel 1 erfolgsstory by michael schmidt toto wolff exklusiv der sportchef der silberpfeile erklärt wie er das formel 1 programm von mercedes bewertet denn es machen gerüchte über

sternstunden 60 jahre die mercedes formel 1 erfolgsstory by - Dec 28 2021

web mercedes formel 1 sternstunden 60 jahre die mercedes formel 1 sternstunden 60 jahre die mercedes formel 1 der traum von der traumehe mercedes chef hält tür für formel 1 ausstieg mercedes dementiert spekulationen