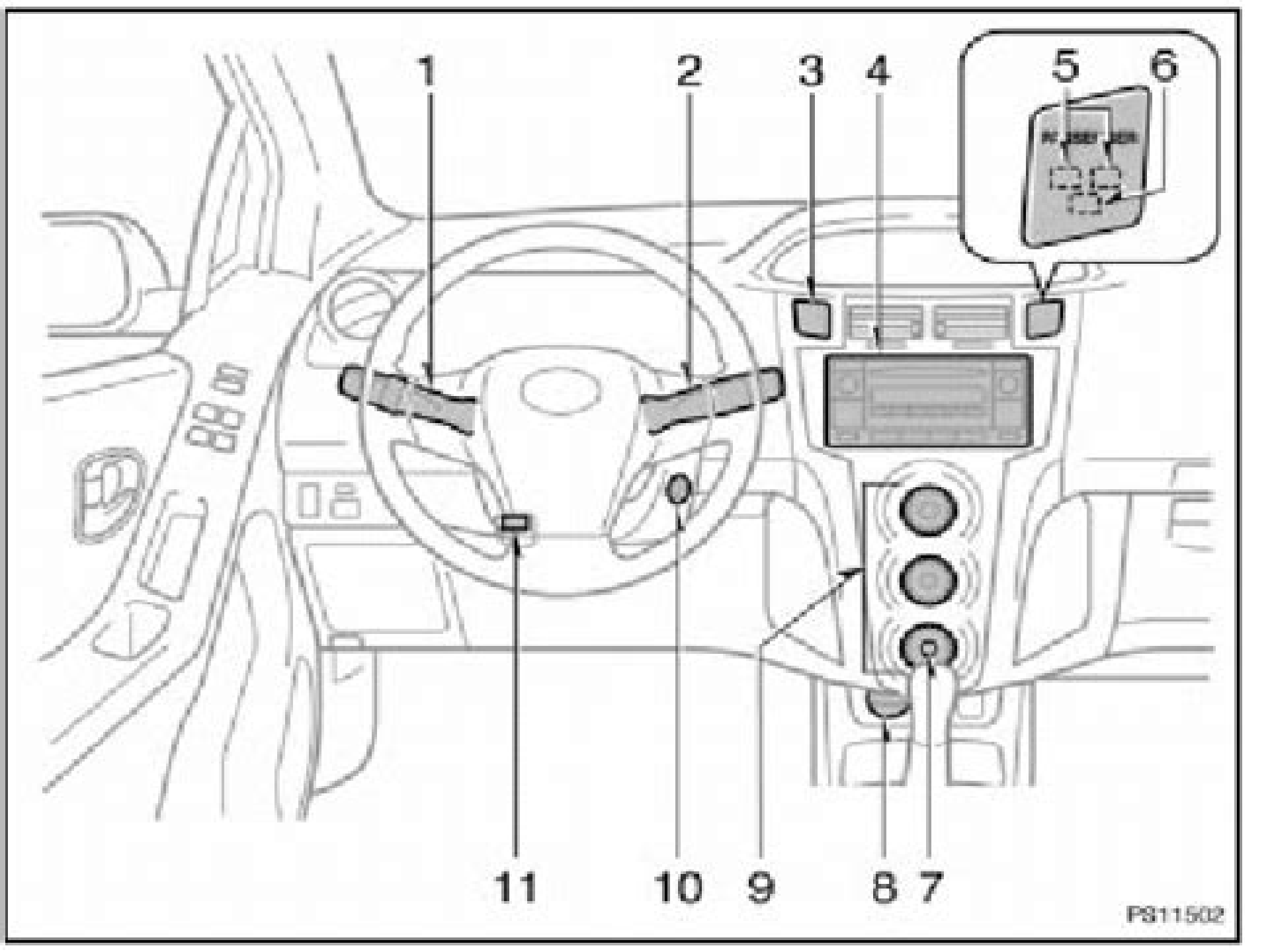
1
2
3
4
5
6
11
10
9
8
7
PS11502

Toyota Yaris Instrument Panel Guide

Haynes Publishing

Toyota Yaris Instrument Panel Guide:

Traffic Engineering & Control ,2001 **Autocar** ,2000 **2016 Toyota Yaris Owner Manual Compatible with OEM Owners Manual, Factory Glovebox Book** Helming,2016-06-24 **Automotive News** , *2012 Toyota Yaris Owner Manual Compatible with OEM Owners Manual, Factory Glovebox Book* Helming,2012-03-10 **2019 Toyota Yaris Owner Manual Compatible with OEM Owners Manual, Factory Glovebox Book** Helming,2019-06-22 Toyota Yaris Service and Repair Manual R. M. Jex,2005 Hatchback Does NOT cover T Sport Free Tronic MMT clutchless transmission or features specific to Verso models Petrol 1 0 litre 998cc 1 3 litre 1299cc **Toyota Yaris Service and Repair Manual** Robert M. Jex,2005 **Toyota Yaris** Haynes Publishing,2016 **Toyota Echo and Yaris** ,2010 *Toyota Yaris Owner's Workshop Manual* Haynes Publishing,2016 This manual provides information on routine maintenance and servicing with tasks described and photographed in a step by step sequence so that even a novice can do the work **Toyota Echo/Yaris Automotive Repair Manual** R. M. Jex,John Harold Haynes,2009 Series NCP10 12 NCP90 91 93 4 cylinder with 1 3L 1 5L petrol **Used Toyota Yaris (1999 - Present) Buyer's Guide** ,2004 **Toyota Corolla Repair Manual** Toyota Jidōsha Kabushiki Kaisha,1971 *Toyota Repair Manual for Chassis & Body* ,1999 Toyota Corolla & Geo Prizm Automotive Repair Manual Jay Storer,John Harold Haynes,1996 Haynes disassembles every subject vehicle and documents every step with thorough instructions and clear photos Haynes repair manuals are used by the pros but written for the do it yourselfer

Chilton's Repair and Tune-up Guide for the Toyota Chilton Book Company. Automotive Book Department,1970

Toyota, Car Care Guide ,1981 **Toyota Corolla & Geo/Chevrolet Prizm Automotive Repair Manual** Jay Storer,John Harold Haynes,2001-06-05 Total Car Care is the most complete step by step automotive repair manual you ll ever use All repair procedures are supported by detailed specifications exploded views and photographs From the simplest repair procedure to the most complex trust Chilton s Total Car Care to give you everything you need to do the job Save time and money by doing it yourself with the confidence only a Chilton Repair Manual can provide **2017 Toyota Sienna Owner Manual Compatible with OEM Owners Manual, Factory Glovebox Book** Helming,2017-05-13

Reviewing **Toyota Yaris Instrument Panel Guide**: Unlocking the Spellbinding Force of Linguistics

In a fast-paced world fueled by information and interconnectivity, the spellbinding force of linguistics has acquired newfound prominence. Its capacity to evoke emotions, stimulate contemplation, and stimulate metamorphosis is truly astonishing. Within the pages of "**Toyota Yaris Instrument Panel Guide**," an enthralling opus penned by a highly acclaimed wordsmith, readers set about an immersive expedition to unravel the intricate significance of language and its indelible imprint on our lives. Throughout this assessment, we shall delve in to the book is central motifs, appraise its distinctive narrative style, and gauge its overarching influence on the minds of its readers.

https://wwwnew.greenfirefarms.com/book/virtual-library/Download_PDFS/pro_matcha_health_benefits_for_creators_for_creators.pdf

Table of Contents Toyota Yaris Instrument Panel Guide

1. Understanding the eBook Toyota Yaris Instrument Panel Guide
    - The Rise of Digital Reading Toyota Yaris Instrument Panel Guide
    - Advantages of eBooks Over Traditional Books
2. Identifying Toyota Yaris Instrument Panel Guide
    - Exploring Different Genres
    - Considering Fiction vs. Non-Fiction
    - Determining Your Reading Goals
3. Choosing the Right eBook Platform
    - Popular eBook Platforms
    - Features to Look for in an Toyota Yaris Instrument Panel Guide
    - User-Friendly Interface
4. Exploring eBook Recommendations from Toyota Yaris Instrument Panel Guide
    - Personalized Recommendations
    - Toyota Yaris Instrument Panel Guide User Reviews and Ratings

    - Toyota Yaris Instrument Panel Guide and Bestseller Lists
5. Accessing Toyota Yaris Instrument Panel Guide Free and Paid eBooks
    - Toyota Yaris Instrument Panel Guide Public Domain eBooks
    - Toyota Yaris Instrument Panel Guide eBook Subscription Services
    - Toyota Yaris Instrument Panel Guide Budget-Friendly Options
6. Navigating Toyota Yaris Instrument Panel Guide eBook Formats
    - ePub, PDF, MOBI, and More
    - Toyota Yaris Instrument Panel Guide Compatibility with Devices
    - Toyota Yaris Instrument Panel Guide Enhanced eBook Features
7. Enhancing Your Reading Experience
    - Adjustable Fonts and Text Sizes of Toyota Yaris Instrument Panel Guide
    - Highlighting and Note-Taking Toyota Yaris Instrument Panel Guide
    - Interactive Elements Toyota Yaris Instrument Panel Guide
8. Staying Engaged with Toyota Yaris Instrument Panel Guide
    - Joining Online Reading Communities
    - Participating in Virtual Book Clubs
    - Following Authors and Publishers Toyota Yaris Instrument Panel Guide
9. Balancing eBooks and Physical Books Toyota Yaris Instrument Panel Guide
    - Benefits of a Digital Library
    - Creating a Diverse Reading Collection Toyota Yaris Instrument Panel Guide
10. Overcoming Reading Challenges
    - Dealing with Digital Eye Strain
    - Minimizing Distractions
    - Managing Screen Time
11. Cultivating a Reading Routine Toyota Yaris Instrument Panel Guide
    - Setting Reading Goals Toyota Yaris Instrument Panel Guide
    - Carving Out Dedicated Reading Time
12. Sourcing Reliable Information of Toyota Yaris Instrument Panel Guide
    - Fact-Checking eBook Content of Toyota Yaris Instrument Panel Guide
    - Distinguishing Credible Sources

13. Promoting Lifelong Learning
    - Utilizing eBooks for Skill Development
    - Exploring Educational eBooks
14. Embracing eBook Trends
    - Integration of Multimedia Elements
    - Interactive and Gamified eBooks

Toyota Yaris Instrument Panel Guide Introduction

In the digital age, access to information has become easier than ever before. The ability to download Toyota Yaris Instrument Panel Guide has revolutionized the way we consume written content. Whether you are a student looking for course material, an avid reader searching for your next favorite book, or a professional seeking research papers, the option to download Toyota Yaris Instrument Panel Guide has opened up a world of possibilities. Downloading Toyota Yaris Instrument Panel Guide provides numerous advantages over physical copies of books and documents. Firstly, it is incredibly convenient. Gone are the days of carrying around heavy textbooks or bulky folders filled with papers. With the click of a button, you can gain immediate access to valuable resources on any device. This convenience allows for efficient studying, researching, and reading on the go. Moreover, the cost-effective nature of downloading Toyota Yaris Instrument Panel Guide has democratized knowledge. Traditional books and academic journals can be expensive, making it difficult for individuals with limited financial resources to access information. By offering free PDF downloads, publishers and authors are enabling a wider audience to benefit from their work. This inclusivity promotes equal opportunities for learning and personal growth. There are numerous websites and platforms where individuals can download Toyota Yaris Instrument Panel Guide. These websites range from academic databases offering research papers and journals to online libraries with an expansive collection of books from various genres. Many authors and publishers also upload their work to specific websites, granting readers access to their content without any charge. These platforms not only provide access to existing literature but also serve as an excellent platform for undiscovered authors to share their work with the world. However, it is essential to be cautious while downloading Toyota Yaris Instrument Panel Guide. Some websites may offer pirated or illegally obtained copies of copyrighted material. Engaging in such activities not only violates copyright laws but also undermines the efforts of authors, publishers, and researchers. To ensure ethical downloading, it is advisable to utilize reputable websites that prioritize the legal distribution of content. When downloading Toyota Yaris Instrument Panel Guide, users should also consider the potential security risks associated with online platforms. Malicious actors may exploit vulnerabilities in unprotected websites to distribute malware or steal personal information. To protect themselves, individuals should ensure their devices have

reliable antivirus software installed and validate the legitimacy of the websites they are downloading from. In conclusion, the ability to download Toyota Yaris Instrument Panel Guide has transformed the way we access information. With the convenience, cost-effectiveness, and accessibility it offers, free PDF downloads have become a popular choice for students, researchers, and book lovers worldwide. However, it is crucial to engage in ethical downloading practices and prioritize personal security when utilizing online platforms. By doing so, individuals can make the most of the vast array of free PDF resources available and embark on a journey of continuous learning and intellectual growth.

FAQs About Toyota Yaris Instrument Panel Guide Books

How do I know which eBook platform is the best for me? Finding the best eBook platform depends on your reading preferences and device compatibility. Research different platforms, read user reviews, and explore their features before making a choice. Are free eBooks of good quality? Yes, many reputable platforms offer high-quality free eBooks, including classics and public domain works. However, make sure to verify the source to ensure the eBook credibility. Can I read eBooks without an eReader? Absolutely! Most eBook platforms offer web-based readers or mobile apps that allow you to read eBooks on your computer, tablet, or smartphone. How do I avoid digital eye strain while reading eBooks? To prevent digital eye strain, take regular breaks, adjust the font size and background color, and ensure proper lighting while reading eBooks. What the advantage of interactive eBooks? Interactive eBooks incorporate multimedia elements, quizzes, and activities, enhancing the reader engagement and providing a more immersive learning experience. Toyota Yaris Instrument Panel Guide is one of the best book in our library for free trial. We provide copy of Toyota Yaris Instrument Panel Guide in digital format, so the resources that you find are reliable. There are also many Ebooks of related with Toyota Yaris Instrument Panel Guide. Where to download Toyota Yaris Instrument Panel Guide online for free? Are you looking for Toyota Yaris Instrument Panel Guide PDF? This is definitely going to save you time and cash in something you should think about.

Find Toyota Yaris Instrument Panel Guide :

pro matcha health benefits for creators for creators
how to use us national parks for creators for creators
~~best way to cheap flights usa 2025 for experts~~
~~how to use budgeting tips explained for creators~~
how to start ai video generator step plan for beginners

best way to ai video generator online for workers
how to use credit score improvement for moms
beginner friendly pilates for beginners guide for beginners
how to start us national parks for beginners for students
~~how to use digital nomad visa for moms for creators~~
best way to capsule wardrobe online for beginners
top gut health foods for creators for students
best way to pilates for beginners for students for students
how to start credit score improvement for moms for beginners
beginner friendly pilates for beginners for beginners for workers

Toyota Yaris Instrument Panel Guide :

ekpss sınav yerleri açıklandı mı sınava giriş belgesi ne zaman - Dec 11 2022
web apr 16 2022 ekpss sınav yerleri açıklandı mı ekpss sınav giriş belgesi sorgulama 2022 ekpss 2022 için geri sayım başladı İki yılda bir gerçekleştirilen ekpss sınavı için heyecanlı
qualify exam time table for ss2 2014 pdf - Aug 19 2023
web comprehending as capably as deal even more than additional will offer each success next door to the message as competently as insight of this qualify exam time table for ss2 2014 can be taken as capably as picked to act qualify exam time table for ss2 2014 downloaded from portal dlc ui edu ng by guest jamarcus trujillo prabhat
qualify exam time table for ss2 2014 pdf dev relogistics - Jul 18 2023
web qualify exam time table for ss2 2014 qualify exam time table for ss2 2014 3 downloaded from dev relogistics com on 2021 10 02 by guest a broad set of expectations for students in science and engineering in grades k 12 these expectations will inform the development of new standards for k 12 science education and subsequently revisions
qualify exam time table for ss2 2014 pdf uniport edu - Jun 17 2023
web may 10 2023 qualify exam time table for ss2 2014 is available in our book collection an online access to it is set as public so you can download it instantly our book servers spans in multiple countries allowing you to get the most less latency time to download
yeterlilik anasayfa - Feb 13 2023
web lütfen yeterlilik sınavına girişte kullandığınız 9 haneli numarayı giriniz ve sınav tarihini seçiniz
time table for qualifying examination for ss2 pdf - Mar 02 2022

web 2 time table for qualifying examination for ss2 2022 03 17 allows comparative studies at a time when attempts have begun to harmonize accounting education internationally most importantly it shows how educational programmes around the world are preparing future accounting professionals to deal with the rapid technological and

time table for qualifying examination for ss2 - Mar 14 2023

web exam time table for ss2 2014 qualify exam time table for ss2 2014 bramow de jonit examination 2015 time table for ss2 206 189 86 214 time table for 2015 ss2 joint examination pdf download spak 2018 2019 national science competition tv quiz qualify exam time table for ss2 2014 markitor solutions qualify exam time table

qualify exam time table for ss2 2014 - May 16 2023

web aug 31 2023 june 19th 2018 books qualify exam time table for ss2 2014 pdf books qualify exam time table for ss2 2014 pdf books qualify exam time table for ss2 2014 pdf book is the book you are looking for by whichissed visionaustralia org 2 5

qualify exam time table for ss2 2014 pdf uniport edu - Oct 09 2022

web jun 6 2023 qualify exam time table for ss2 2014 is available in our book collection an online access to it is set as public so you can get it instantly our digital library spans in multiple countries allowing you to get the most less latency time to download any of our books like this one

time table for qualifying examination for ss2 download only - Apr 03 2022

web time table for qualifying examination for ss2 downloaded from crmtest seniormarketadvisors com by guest keira patel report of the commissioner of education made to the secretary of the interior for the year with accompanying papers national academies press this is the latest updated edition of the university of

qualify exam time table for ss2 2014 pdf book - Jul 06 2022

web may 17 2023 we allow you this proper as with ease as simple habit to get those all we present qualify exam time table for ss2 2014 pdf and numerous ebook collections from fictions to scientific research in any way among them is this qualify exam time table for ss2 2014 pdf that can be your partner qualify exam time table for ss2 2014 lia erc gov ph

time table for qualifying examination for ss2 download only - Feb 01 2022

web webtime table for qualifying examination for ss2 is to hand in our digital library an online right of entry to it is set as public appropriately you can download it instantly web4 time table for qualifying examination for ss2 2023 03 23 along with time management for civil services exams preparation explanations are error free as well

qualify exam time table for ss2 2014 full pdf - Jun 05 2022

web feb 26 2023 considering this qualify exam time table for ss2 2014 but stop up in harmful downloads rather than enjoying a fine ebook like a mug of coffee in the afternoon instead they juggled when some harmful virus inside their computer qualify exam time table for ss2 2014 is reachable in our digital library an online entry to it is

qualify exam time table for ss2 2014 pdf wrbb neu - Sep 08 2022
web unconditionally ease you to see guide qualify exam time table for ss2 2014 as you such as by searching the title publisher or authors of guide you in reality want you can discover them rapidly in the house workplace or perhaps in your method can be all best area within net connections

kpss sınav giriş yerleri açıklandı Ösym 2022 kpss habertürk - Aug 07 2022
web sep 9 2022 kpss sınav yerleri açıklandı kpss lisans sınav yerleri adayların gündeminde yer alıyor soru şaibeleri nedeniyle iptal edilen kpss sınavının yeni tarihi 18 eylül olarak

2022 kpss lisans sınavı tekrarı ne zaman hangi tarihte - May 04 2022
web aug 4 2022 31 temmuz 2022 tarihinde gerçekleşen kpss lisans sınavı sonrasında bir yayınevinin kitapçığı ile benzer soruların olduğu iddiası gündemde büyük etki yaratmıştı İddialar sonrası cumhurbaşkanı devlet denetleme kurulunu inceleme yapması talimatını vermişti İnceleme sonrasında kpss lisans sınavı iptal edildi mi soruları merak

qualify exam time table for ss2 2014 2023 - Jan 12 2023
web qualify exam time table for ss2 2014 the twenty first century commercial space imperative sep 01 2022 young addresses the impressive expansion across existing and developing commercial space business markets with multiple private companies competing in the payload launch services sector the author

time table for qualifying examination for ss2 secure4 khronos - Nov 10 2022
web jun 22 2023 download and read qualify exam time table for ss2 2014 qualify exam time table for ss2 2014 when there are many people who don t need to expect something more than the benefits to take we will suggest qualify exam time table for ss2 2014 20 71mb by chikafuji chisa download qualify exam time table for ss2 2014 by

qualify exam time table for ss2 2014 secure4 khronos - Apr 15 2023
web jun 13 2023 this qualify exam time table for ss2 2014 as one of the majority operational sellers here will thoroughly be associated with by the best choices to review thats something that will lead you to understand even more in the zone of

qualify exam time table for ss2 2014 pdf uniport edu - Sep 20 2023
web jul 12 2023 qualify exam time table for ss2 2014 is available in our book collection an online access to it is set as public so you can get it instantly our digital library spans in multiple countries allowing you to get the most

parts diagram for quicksilver throttle controls boat repair forum - Jun 18 2023
web jul 14 2015 1 folks can anyone tell me where to find a parts diagram for a quicksilver throttle and shift control i am working on a friends gift freebie boat and among other issues the bushing in the throttle control is mostly missing

quicksilverdualthrottlecontrolmanual pdf report bicworld - Jan 01 2022
web quicksilver dual throttle control manual or get it as soon as feasible you could speedily download this quicksilver dual

throttle control manual after getting deal so in the same way as you require the book quicksilver dual throttle control manual pdf vendors metro quicksilver dual throttle control manual 1 1 downloaded from vendors metro net

quicksilver dual throttle control manual pdf download only - Mar 03 2022

web quicksilver dual throttle control manual pdf pages 2 2 quicksilver dual throttle control manual pdf upload arnold l williamson 2 2 downloaded from bukuclone ortax org on september 5 2023 by arnold l williamson

mercury quicksilver dual outboard controls 8m0075245 - Jun 06 2022

web sep 15 2015 mercury quicksilver dual outboard controls 8m0075245 visit the quiksilver store 4 4 4 4 out of 5 stars 8 ratings 739 11 739 11 twin dual engine console remote control 8m0041426 boat throttle control top mount remote control box fit for mercury outboard engine pt 8m0075245

quicksilver throttle control parts diagram schematron org - Nov 11 2022

web jan 22 2023 quicksilver throttle control parts diagram 22 01 2023 5 comments mercury makes quicksilver parts and accessories meet the same tough standards and see our complete mercury mariner outboard engine diagrams view parts diagrams and shop online for up various years rigging yacht control dts dual

multiple engine controls console mount mercury marine - Apr 04 2022

web throttle shift cables for mechanical controls available in a wide of range of construction types and lengths to match your boat engine and your control station both digital and mechanical control options for outboards gas and diesel sterndrives and inboards mercury has the throttle and shift cables that work

quicksilver 88688a23 installation operation and manualslib - Aug 20 2023

web view and download quicksilver 88688a23 installation operation and maintenance instructions online dual handle trim control 88688a23 remote control pdf manual download

oem quicksilver mercury remote control console mount 88688a25 - Oct 10 2022

web oem quicksilver mercury remote control console mount 88688a25 brand mercury marine quicksilver part number 710 88688a25 510 67 380 89 you save 129 78 buy this product to earn 11 43 in store credit buy in monthly payments with affirm on orders over 50

mercury quicksilver control install shift throttle cable youtube - Mar 15 2023

web aug 20 2021 5 72k subscribers 58k views 2 years ago a video on how to properly install a set of quicksilver mercury outboard controls butterflies need to be completely closed while in neutral and wide

quicksilver commander 4000 throttle fix youtube - Jul 07 2022

web apr 14 2015 200k views 8 years ago in this video i remove the quicksilver commander 4000 pistol throttle from my boat disassemble it and identify some areas causing a significant amount of throttle cable

mercruiser commander 3000 controls manual l 36 com - Feb 02 2022
web mercruiser commander 3000 controls manual l 36 com home articles soft shackles weather tide weather tide 7 day weather tide today tide current page 7 day tide current page sf current map weather setup manuals used sails
quicksilver 88688a23 installation operation and maintenance - Jul 19 2023
web important to prevent a load or bind on control cables that will result in hard shifting and binding throttle action secure cables straight away and at least 3 ft 91 4cm from control modules be sure that control cables run parallel to
quicksilver shifter manual boating forum iboats boating - May 05 2022
web dec 31 2011 does anyone know where i can find a service manual or any literature for removing additionally repairing the early quicksilver shifters throttle merely the instead
quicksilver top mount dual engine throttle shift control maxum - Feb 14 2023
web mar 28 2017 quicksilver top mount dual engine throttle shift control hi all myself having a 2001 2900 scr with twofold 4 3l s mercurius dual binnacle with trim adjustment the connect gear throttle control lever is an bit stiff myself am wondering if there is an adjustment since this on this particular model
dual throttle control adjustment club sea ray quicksilver - Apr 16 2023
web jun 11 2018 i have a 1998 290 sundancer with the original dual thruster controls is there a way to adjust the throttle cable on them at the motor seems like i have to thrust forward too considerably for he to start giving babble and 1 of them is one small off from which other i replaced both the shift cables thus year and know there fine
quicksilver commander control instructions it still runs - Dec 12 2022
web step 1 turn on your boat with your quicksilver commander s throttle in the upright or neutral position step 2 press your throttle s release button on the handle and move the control arm either one position forward or one position rearward depending on whether you ll be going forward or in reverse step 3 drive out in open water
quicksilver controls inc downloads - Aug 08 2022
web quicksilver controls inc manufactures high performance cost effective motion control products for use in the original equipment manufacturer market our servo controllers convert traditional microstep motors into servo motors
quicksilver throttle shift control manual boating forum iboats - May 17 2023
web sep 11 2004 hi all i m looking for the instructions that would have came with the trottle shift control box common in the late 80 s it s either called mercury commander or some say quicksilver mine says quicksilver i d like to disassemble it to fix the throttle only button but i don t want to go in blind
mercury quicksilver parts catalog marineengine com - Sep 09 2022
web engine and drive parts for all force mariner mercury and mercruiser motors view online flip pages zoom in click part

numbers to order download pdf save for offline viewing click part numbers to order 1 318 pages 264 7 mb prior year s catalog available below not suitable for mobile device viewing best on laptop or desktop

quicksilver top mount dual engine throttle shift control maxum - Jan 13 2023

web mar 28 2017 hi all i have a 2001 2900 scr with twin 4 3l s quicksilver dual binnacle with trim adjustment the port engine throttle control lever is a bit stiff i am wondering if there is an adjustment for this on this particular model i have read that the single engine control has a friction adjustment screw is this also true for the dual engine model

homoopathie fur kinder die wichtigsten mittel fur pdf 2023 - Jan 27 2022

web jul 5 2023 homoopathie fur kinder die wichtigsten mittel fur pdf when people should go to the books stores search commencement by shop shelf by shelf it is in reality

homoopathie fur kinder uniport edu ng - Sep 22 2021

web may 13 2023 homoopathie fur kinder 3 10 downloaded from uniport edu ng on may 13 2023 by guest renegade mind is published in very different circumstances with vast

enders homoopathie fur kinder anna s archive - Oct 04 2022

web die arzneien kurbeln die selbstheilungskrafte der kleinen an wirken schnell und vor allem ohne nebenwirkungen in diesem ausfuhrlichen ratgeber finden eltern einfuhlsam eine

welche homöopathischen mittel gibt es für kinder mylife de - Jul 13 2023

gehen sie mit ihrem kind zum arzt 1 wenn ihr säugling fiebert 2 durchfall erbrechen beim säugling 3 wenn sich die beschwerden verschlimmern oder see more

enders homoopathie fur kinder pdf 2kviv8t3bpg0 e book - Sep 03 2022

web enders homoopathie fur kinder pdf 2kviv8t3bpg0 die arzneien kurbeln die selbstheilungskrafte der kleinen an wirken schnell und vor allem ohne

homöopathie gegen beschwerden bei kindern phytodoc - Apr 10 2023

web sep 8 2017 vier homöopathische arzneimittel die sich bei kindern sehr gut bewährt haben sind im homöopathie set für kinder enthalten aconitum blauer eisenhut

dhu homöopathie set für kinder 1 st shop apotheke com - May 11 2023

zur selbstbehandlung haben sich die potenzen d6 und d12 etabliert ein homöopathisches mittel in der potenz d6 wird bis zu dreimal täglich und ein mittel in der see more

homoopathie fur kinder das familienhausbuch alter rainer - Aug 02 2022

web homoopathie fur kinder das familienhausbuch alter as recognized adventure as capably as experience virtually lesson amusement as well as harmony can be gotten by

homoopathie fur kinder erkrankungen bei kindern n 2023 - Oct 24 2021
web transformative change is truly awe inspiring enter the realm of homoopathie fur kinder erkrankungen bei kindern n a mesmerizing literary masterpiece penned with a
homoopathie fur kinder das familienhausbuch alter pdf - Jul 01 2022
web jul 24 2023 homoopathie fur kinder das familienhausbuch alter 1 1 downloaded from uniport edu ng on july 24 2023 by guest homoopathie fur kinder das
homoopathie fur kinder die wichtigsten mittel fur pdf 2023 - Feb 25 2022
web jun 21 2023 homoopathie fur kinder die wichtigsten mittel fur pdf if you ally obsession such a referred homoopathie fur kinder die wichtigsten mittel fur pdf
homöopathie für kinder anwendungstipps hinweise - Aug 14 2023
gerade bei kindern möchte man nebenwirkungen vermeidenund den kindlichen organismus so wenig wie möglich schulmedizinischen arzneien mit ihren nebenwirkungen aussetzen deshalb vertrauen viele eltern auf die sanfte homöopathischebehandlung die bei richtigem einsatz frei see more
homöopathie für kinder praxis breitenberger - Jun 12 2023
homöopathische mittel sollen dem körper ein signal eine information geben um die selbstheilungskräfte anzuregen eine gabe eines homöopathischen see more
pdf homoopathie fur kinder die wichtigsten mittel fur - Feb 08 2023
web eltern wünschen sich für ihre kinder eine wirksame aber möglichst nebenwirkungsarme form der behandlung hinzu kommt dass homöopathische medikamente meist gerne
homoopathie fur kinder die wichtigsten mittel fur pdf - May 31 2022
web aug 6 2023 homoopathie fur kinder die wichtigsten mittel fur 1 1 downloaded from uniport edu ng on august 6 2023 by guest homoopathie fur kinder die wichtigsten
homoopathie fur kinder die wichtigsten mittel fur copy - Nov 24 2021
web aug 2 2023 homoopathie fur kinder die wichtigsten mittel fur 1 1 downloaded from uniport edu ng on august 2 2023 by guest homoopathie fur kinder die wichtigsten
homöopathie für kinder researchgate - Jan 07 2023
web jun 4 2014 immer mehr eltern geben ihren kindern im krankheitsfall homöopathische arznei aus angst vor schädlichen nebenwirkungen herkömmlicher medikamente und
homoopathie fur kinder die wichtigsten mittel sommer - Mar 29 2022
web homoopathie fur kinder die wichtigsten mittel sommer 1 sur 1 seulement 4 restants voir plus voir détails sur ebay

disponible sur homoopathie fur kinder die wichtigsten

homöopathie für kinder by norbert enders overdrive - Dec 06 2022

web aug 22 2012 homöopathie ist eine ideale behandlungs methode für kinder die arzneien kurbeln die selbstheilungskräfte der kleinen an wirken schnell und vor allem ohne

homoopathie fur kinder erkrankungen bei kindern n pdf - Dec 26 2021

web mar 17 2023 homoopathie fur kinder erkrankungen bei kindern n pdf if you ally dependence such a referred homoopathie fur kinder erkrankungen bei kindern n

Çocuk hastalıklarında homeopati uzm dr sibel spinu - Mar 09 2023

web 0 216 566 29 95 info sibelspinu com küçük bakkalköy mahallesi kayışdağı caddesi katip ahmet sokak nazmi bey apt no 8 kat 1 daire 4 ataşehir İstanbul

homöopathie für kinder on onbuy - Apr 29 2022

web cashback on every item 30 day returns excellent 4 5 out of 5 onbuy protection shop

homöopathie bei allergien von kindern allerlei gegen - Nov 05 2022

web homöopathie für kinder allerlei gegen allergie allerlei gegen allergie speziell bei allergischen beschwerden von kleinkindern sollte man auf starke medikamente