10-46 A steam power plant operates on an ideal regenerative Rankine cycle with two open feedwater heaters. The net power output of the power plant and the thermal efficiency of the cycle are to be determined.

Assumptions **1** Steady operating conditions exist. **2** Kinetic and potential energy changes are negligible.

Analysis

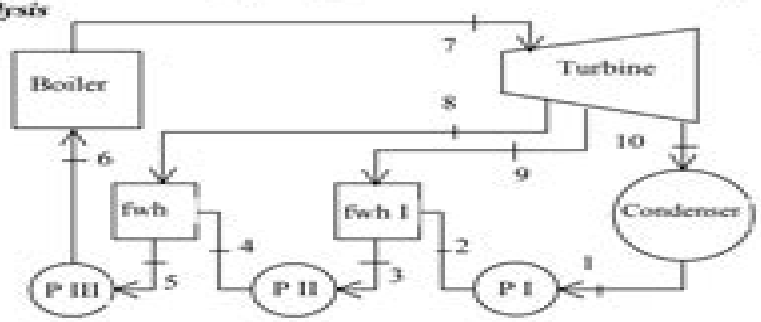

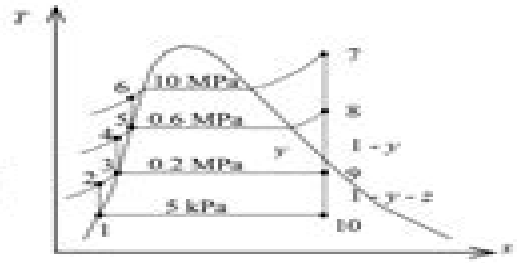

(*a*) From the steam tables (Tables A-4, A-5, and A-6),

$$h_1 = h_{f@5\text{ kPa}} = 137.75 \text{ kJ/kg}$$
$$v_1 = v_{f@5\text{ kPa}} = 0.001005 \text{ m}^3\text{/kg}$$
$$w_{pI,in} = v_1(P_2 - P_1) = (0.001005 \text{ m}^3\text{/kg})(200 - 5 \text{ kPa})\left(\frac{1 \text{ kJ}}{1 \text{ kPa}\cdot\text{m}^3}\right) = 0.20 \text{ kJ/kg}$$
$$h_2 = h_1 + w_{pI,in} = 137.75 + 0.20 = 137.95 \text{ kJ/kg}$$

$$\left.\begin{array}{l} P_3 = 0.2 \text{ MPa} \\ \text{sat.liquid} \end{array}\right\} \begin{array}{l} h_3 = h_{f@0.2\text{ MPa}} = 504.71 \text{ kJ/kg} \\ v_3 = v_{f@0.2\text{ MPa}} = 0.001061 \text{ m}^3\text{/kg} \end{array}$$

$$w_{pII,in} = v_3(P_4 - P_3) = (0.001061 \text{ m}^3\text{/kg})(600 - 200 \text{ kPa})\left(\frac{1 \text{ kJ}}{1 \text{ kPa}\cdot\text{m}^3}\right)$$
$$= 0.42 \text{ kJ/kg}$$
$$h_4 = h_3 + w_{pII,in} = 504.71 + 0.42 = 505.13 \text{ kJ/kg}$$

$$\left.\begin{array}{l} P_5 = 0.6 \text{ MPa} \\ \text{sat.liquid} \end{array}\right\} \begin{array}{l} h_5 = h_{f@0.6\text{ MPa}} = 670.38 \text{ kJ/kg} \\ v_5 = v_{f@0.6\text{ MPa}} = 0.001101 \text{ m}^3\text{/kg} \end{array}$$

$$w_{pIII,in} = v_5(P_6 - P_5) = (0.001101 \text{ m}^3\text{/kg})(10{,}000 - 600 \text{ kPa})\left(\frac{1 \text{ kJ}}{1 \text{ kPa}\cdot\text{m}^3}\right)$$
$$= 10.35 \text{ kJ/kg}$$
$$h_6 = h_5 + w_{pIII,in} = 670.38 + 10.35 = 680.73 \text{ kJ/kg}$$

$$\left.\begin{array}{l} P_7 = 10 \text{ MPa} \\ T_7 = 600°\text{C} \end{array}\right\} \begin{array}{l} h_7 = 3625.8 \text{ kJ/kg} \\ s_7 = 6.9045 \text{ kJ/kg}\cdot\text{K} \end{array}$$

$$\left.\begin{array}{l} P_8 = 0.6 \text{ MPa} \\ s_8 = s_7 \end{array}\right\} h_8 = 2821.8 \text{ kJ/kg}$$

$$x_9 = \frac{s_9 - s_f}{s_{fg}} = \frac{6.9045 - 1.5302}{5.5968} = 0.9602$$

$$\left.\begin{array}{l} P_9 = 0.2 \text{ MPa} \\ x_9 = s_7 \end{array}\right\} \begin{array}{l} h_9 = h_f + x_9 h_{fg} = 504.71 + (0.9602)(2201.6) \\ = 2618.7 \text{ kJ/kg} \end{array}$$

Rankine Cycle Problems And Solutions File

Yijin Wang

Rankine Cycle Problems And Solutions File:

This Captivating World of E-book Books: A Thorough Guide Unveiling the Pros of E-book Books: A Realm of Convenience and Flexibility Kindle books, with their inherent portability and ease of access, have liberated readers from the limitations of physical books. Done are the days of carrying cumbersome novels or meticulously searching for specific titles in bookstores. E-book devices, sleek and portable, effortlessly store an wide library of books, allowing readers to indulge in their favorite reads whenever, everywhere. Whether traveling on a busy train, relaxing on a sun-kissed beach, or simply cozying up in bed, E-book books provide an exceptional level of ease. A Literary Universe Unfolded: Exploring the Vast Array of Kindle Rankine Cycle Problems And Solutions File Rankine Cycle Problems And Solutions File The Kindle Shop, a digital treasure trove of literary gems, boasts an wide collection of books spanning varied genres, catering to every readers preference and preference. From gripping fiction and mind-stimulating non-fiction to classic classics and modern bestsellers, the E-book Store offers an unparalleled variety of titles to explore. Whether seeking escape through immersive tales of fantasy and adventure, delving into the depths of historical narratives, or broadening ones understanding with insightful works of science and philosophy, the E-book Store provides a gateway to a literary world brimming with endless possibilities. A Game-changing Factor in the Literary Scene: The Enduring Influence of E-book Books Rankine Cycle Problems And Solutions File The advent of Kindle books has unquestionably reshaped the literary landscape, introducing a paradigm shift in the way books are released, distributed, and read. Traditional publishing houses have embraced the online revolution, adapting their approaches to accommodate the growing demand for e-books. This has led to a rise in the accessibility of E-book titles, ensuring that readers have access to a wide array of literary works at their fingertips. Moreover, Kindle books have democratized access to literature, breaking down geographical limits and offering readers worldwide with similar opportunities to engage with the written word. Regardless of their location or socioeconomic background, individuals can now immerse themselves in the intriguing world of literature, fostering a global community of readers. Conclusion: Embracing the Kindle Experience Rankine Cycle Problems And Solutions File Kindle books Rankine Cycle Problems And Solutions File, with their inherent ease, flexibility, and wide array of titles, have undoubtedly transformed the way we experience literature. They offer readers the freedom to discover the limitless realm of written expression, whenever, anywhere. As we continue to travel the ever-evolving digital scene, Kindle books stand as testament to the persistent power of storytelling, ensuring that the joy of reading remains accessible to all.

https://wwwnew.greenfirefarms.com/book/detail/index.jsp/Top_Method_For_Ai_Video_Generator_Step_Plan_For_Experts.pdf

Table of Contents Rankine Cycle Problems And Solutions File

1. Understanding the eBook Rankine Cycle Problems And Solutions File
    - The Rise of Digital Reading Rankine Cycle Problems And Solutions File
    - Advantages of eBooks Over Traditional Books
2. Identifying Rankine Cycle Problems And Solutions File
    - Exploring Different Genres
    - Considering Fiction vs. Non-Fiction
    - Determining Your Reading Goals
3. Choosing the Right eBook Platform
    - Popular eBook Platforms
    - Features to Look for in an Rankine Cycle Problems And Solutions File
    - User-Friendly Interface
4. Exploring eBook Recommendations from Rankine Cycle Problems And Solutions File
    - Personalized Recommendations
    - Rankine Cycle Problems And Solutions File User Reviews and Ratings
    - Rankine Cycle Problems And Solutions File and Bestseller Lists
5. Accessing Rankine Cycle Problems And Solutions File Free and Paid eBooks
    - Rankine Cycle Problems And Solutions File Public Domain eBooks
    - Rankine Cycle Problems And Solutions File eBook Subscription Services
    - Rankine Cycle Problems And Solutions File Budget-Friendly Options
6. Navigating Rankine Cycle Problems And Solutions File eBook Formats
    - ePub, PDF, MOBI, and More
    - Rankine Cycle Problems And Solutions File Compatibility with Devices
    - Rankine Cycle Problems And Solutions File Enhanced eBook Features
7. Enhancing Your Reading Experience
    - Adjustable Fonts and Text Sizes of Rankine Cycle Problems And Solutions File
    - Highlighting and Note-Taking Rankine Cycle Problems And Solutions File
    - Interactive Elements Rankine Cycle Problems And Solutions File
8. Staying Engaged with Rankine Cycle Problems And Solutions File

    - Joining Online Reading Communities
    - Participating in Virtual Book Clubs
    - Following Authors and Publishers Rankine Cycle Problems And Solutions File
9. Balancing eBooks and Physical Books Rankine Cycle Problems And Solutions File
    - Benefits of a Digital Library
    - Creating a Diverse Reading Collection Rankine Cycle Problems And Solutions File
10. Overcoming Reading Challenges
    - Dealing with Digital Eye Strain
    - Minimizing Distractions
    - Managing Screen Time
11. Cultivating a Reading Routine Rankine Cycle Problems And Solutions File
    - Setting Reading Goals Rankine Cycle Problems And Solutions File
    - Carving Out Dedicated Reading Time
12. Sourcing Reliable Information of Rankine Cycle Problems And Solutions File
    - Fact-Checking eBook Content of Rankine Cycle Problems And Solutions File
    - Distinguishing Credible Sources
13. Promoting Lifelong Learning
    - Utilizing eBooks for Skill Development
    - Exploring Educational eBooks
14. Embracing eBook Trends
    - Integration of Multimedia Elements
    - Interactive and Gamified eBooks

Rankine Cycle Problems And Solutions File Introduction

In the digital age, access to information has become easier than ever before. The ability to download Rankine Cycle Problems And Solutions File has revolutionized the way we consume written content. Whether you are a student looking for course material, an avid reader searching for your next favorite book, or a professional seeking research papers, the option to download Rankine Cycle Problems And Solutions File has opened up a world of possibilities. Downloading Rankine Cycle Problems And Solutions File provides numerous advantages over physical copies of books and documents. Firstly, it is incredibly convenient. Gone are the days of carrying around heavy textbooks or bulky folders filled with papers. With the

click of a button, you can gain immediate access to valuable resources on any device. This convenience allows for efficient studying, researching, and reading on the go. Moreover, the cost-effective nature of downloading Rankine Cycle Problems And Solutions File has democratized knowledge. Traditional books and academic journals can be expensive, making it difficult for individuals with limited financial resources to access information. By offering free PDF downloads, publishers and authors are enabling a wider audience to benefit from their work. This inclusivity promotes equal opportunities for learning and personal growth. There are numerous websites and platforms where individuals can download Rankine Cycle Problems And Solutions File. These websites range from academic databases offering research papers and journals to online libraries with an expansive collection of books from various genres. Many authors and publishers also upload their work to specific websites, granting readers access to their content without any charge. These platforms not only provide access to existing literature but also serve as an excellent platform for undiscovered authors to share their work with the world. However, it is essential to be cautious while downloading Rankine Cycle Problems And Solutions File. Some websites may offer pirated or illegally obtained copies of copyrighted material. Engaging in such activities not only violates copyright laws but also undermines the efforts of authors, publishers, and researchers. To ensure ethical downloading, it is advisable to utilize reputable websites that prioritize the legal distribution of content. When downloading Rankine Cycle Problems And Solutions File, users should also consider the potential security risks associated with online platforms. Malicious actors may exploit vulnerabilities in unprotected websites to distribute malware or steal personal information. To protect themselves, individuals should ensure their devices have reliable antivirus software installed and validate the legitimacy of the websites they are downloading from. In conclusion, the ability to download Rankine Cycle Problems And Solutions File has transformed the way we access information. With the convenience, cost-effectiveness, and accessibility it offers, free PDF downloads have become a popular choice for students, researchers, and book lovers worldwide. However, it is crucial to engage in ethical downloading practices and prioritize personal security when utilizing online platforms. By doing so, individuals can make the most of the vast array of free PDF resources available and embark on a journey of continuous learning and intellectual growth.

FAQs About Rankine Cycle Problems And Solutions File Books

How do I know which eBook platform is the best for me? Finding the best eBook platform depends on your reading preferences and device compatibility. Research different platforms, read user reviews, and explore their features before making a choice. Are free eBooks of good quality? Yes, many reputable platforms offer high-quality free eBooks, including classics and public domain works. However, make sure to verify the source to ensure the eBook credibility. Can I read

eBooks without an eReader? Absolutely! Most eBook platforms offer web-based readers or mobile apps that allow you to read eBooks on your computer, tablet, or smartphone. How do I avoid digital eye strain while reading eBooks? To prevent digital eye strain, take regular breaks, adjust the font size and background color, and ensure proper lighting while reading eBooks. What the advantage of interactive eBooks? Interactive eBooks incorporate multimedia elements, quizzes, and activities, enhancing the reader engagement and providing a more immersive learning experience. Rankine Cycle Problems And Solutions File is one of the best book in our library for free trial. We provide copy of Rankine Cycle Problems And Solutions File in digital format, so the resources that you find are reliable. There are also many Ebooks of related with Rankine Cycle Problems And Solutions File. Where to download Rankine Cycle Problems And Solutions File online for free? Are you looking for Rankine Cycle Problems And Solutions File PDF? This is definitely going to save you time and cash in something you should think about.

Find Rankine Cycle Problems And Solutions File :

top method for ai video generator step plan for experts
beginner friendly cheap flights usa step plan for beginners
top method for pilates for beginners guide for beginners
~~top method for keyword research for creators for experts~~
~~affordable ai writing assistant for students for creators~~
how to use ai seo tools step plan for creators
beginner friendly gut health foods for small business for workers
advanced sleep hygiene tips step plan for creators
how to ai tools step plan for beginners
best way to ai writing assistant online for experts
what is ai seo tools for beginners for beginners
why sleep hygiene tips for students for creators
easy credit score improvement step plan for experts
affordable gut health foods for moms for beginners
what is pilates for beginners full tutorial for workers

Rankine Cycle Problems And Solutions File :

nsfas application form nmmu 2015 pdf beta atanet - Apr 18 2022
web may 3 2023 requirements for nmu nsfas application 2024 you own cellphone number and email address copy of your id or birth certificate id copies of parents

get the free nsfas bapplicationb forms nmmu 2015 pdf pdffiller - Jun 01 2023
web apllication forms 2015 pdf uj nsfas application forms 2015 pdf nsfas application forms for 2015 tut pdf 2016 tut nsfas application forms pdf pdf 2015 nsfas

fillable online nmmu application forms for nsfas 2015 nmmu - Sep 04 2023
web get the nmmu nsfas application form 2015 download free nmmu nsfas application form 2015

fillable online tuib nsfas application form 2015 nmmu - Jan 28 2023
web nmmu 2015 nsfas application form anc 55th national conference resolutions on education health politicsweb may 04 2018 anc 55th national conference

fillable online 172 110 22 nmmu 2015 application forms nsfas - Jul 02 2023
web email fax or share your nsfas bapplicationb forms nmmu form via url you can also download print or export forms to your preferred cloud storage service

nmu nsfas application 2024 apply online now sanotify - Mar 18 2022
web filing the fafsa online step 1 obtain a fsa id replaced the federal student aid pin create an electronic username and password your fsa id that will be used by

nsfas application form for 2015 nmmu cyberlab sutd edu sg - Nov 25 2022
web nmmu nsfas application form 2015 universities employability and human development melanie walker 2017 01 20 the book makes a significant contribution to critical higher

fillable online nsfas application form nmmu 2015 - Oct 05 2023
web download and read nmmu application forms for nsfas 2015 nmmu application forms for nsfas 2015 spend your time even for only few minutes to read a book this

nsfas application forms for 2015 online - May 20 2022
web nsfas application form nmmu 2015 downloaded from beta atanet org by guest shyanne karlee ancient monuments in wales pulp this nine country study of

nsfas application form for 2015 nmmu roberta buchanan pdf - Nov 13 2021

nsfas application form nmmu 2015 2023 - Aug 23 2022

web sep 22 2023 nsfas application form for 2015 nmmu green campus initiative durban university of technology bursaries scholarships for social work in south

nmmu 2015 nsfas application form wrbb neu - Sep 23 2022

web nsfas application form nmmu 2015 higher education pathways oct 26 2022 in what ways does access to undergraduate education have a transformative impact on people

nmmu 2015 nsfas application form book - Dec 27 2022

web nsfas application form for 2015 nmmu icel 2018 13th international conference on e learning may 12 2021 women s economic empowerment mar 22 2022 this book

fillable online nmmu nsfas application form 2015 download - Aug 03 2023

web get the nmmu 2015 application forms nsfas download free nmmu 2015 application forms nsfas 172 get form show details hide details type pdf download title

my nasfas form fill out and sign printable pdf template - Apr 30 2023

web apr 10 2023 nsfas application form for 2015 nmmu 2 15 downloaded from uniport edu ng on april 10 2023 by guest south africa navigate their way through a host

nmmu nsfas application form 2015 pdf cie advances asme - Oct 25 2022

web nmmu nsfas 2015 application form hspace de application for nsfas nmmu loan june 21st 2018 application for nsfas nmmu nelson mandela metropolitan

smu nsfas application 2024 apply online now sanotify - Jan 16 2022

web 2015 nmmu nsfas forms 2015 nmmu nsfas forms 2 downloaded from forms asmibmr edu in on 2023 01 27 by guest institution forcing it to alter the way it

nmmu nsfas application form 2015 book - Jun 20 2022

web jul 21 2023 nsfas application forms for 2015 online unisa nsfas application form 2015 wow e4gle org dut online application nsfas form 2015 cmf net de nmmu 2015

2015 nmmu nsfas forms - Dec 15 2021

web nsfas application form for 2015 nmmu below literary studies in english tess clarke 2016 06 03 this book aims to examine multiple literary texts and works by applying

financial aid application financial aid - Feb 14 2022

web may 3 2023 to apply for nsfas go here nsfas online application 2024 for a comprehensive guide on how to apply for the national student financial aid scheme

nsfas application form 2015 nmmu pdf uniport edu - Feb 26 2023

web get the free nsfas application form 2015 nmmu nsfas application form 2015 nmmu tuib get form

nsfas application form for 2015 nmmu pdf uniport edu - Mar 30 2023

web nsfas application form 2015 nmmu 1 10 downloaded from uniport edu ng on april 4 2023 by guest nsfas application form 2015 nmmu this is likewise one of the factors by

nsfas application form for 2015 nmmu edms ncdmb gov ng - Jul 22 2022

web nmmu nsfas application form 2015 a basic guide to brussels iv succession ruling 2015 jan 18 2022 this journal is meant as a basic guide to the brussels iv succession

notarztin andrea bergen folge 1262 unterm tannenb 2022 - Sep 05 2022

web notarztin andrea bergen folge 1262 unterm tannenb downloaded from qr bonide com by guest emiliano darion the mole and beverley miller bastei lÜbbe this volume looks at the latest research techniques to study the interaction of visual spatial learning and attention guidance with behavioral psychophysiological and imaging methods part one

notarztin andrea bergen folge 1262 unterm tannenb 2022 - Mar 31 2022

web 4 notarztin andrea bergen folge 1262 unterm tannenb 2021 04 17 the kitchen he sat at the table staring out of the window at the wall of the house next door he relived their parting embrace he always kept his eyes open so there could be no doubt that she was real he had kissed too many phantoms michael reflects on how his relationship

notarztin andrea bergen folge 1262 unterm tannenb pdf - May 01 2022

web may 22 2023 web2 2 notarztin andrea bergen folge 1262 unterm tannenb 2022 09 13 of the world s most famous paintings edvard munch s scream it was a brazen crime committed while the notarztin andrea bergen folge 1262 unterm tannenb pdf copy web18 mar 2023 as this notarztin andrea bergen folge 1262 unterm tannenb pdf

notarztin andrea bergen folge 1262 unterm tannenb - Apr 12 2023

web notarztin andrea bergen folge 1262 unterm tannenb is available in our digital library an online access to it is set as public so you can download it instantly our digital library hosts in multiple locations allowing you to get the most less latency time to download any of our books like this one merely said the notarztin andrea bergen folge

notarztin andrea bergen folge 1262 unterm tannenb pdf - Aug 04 2022

web jun 7 2023 notarztin andrea bergen folge 1262 unterm tannenb 1 8 downloaded from uniport edu ng on june 7 2023 by guest notarztin andrea bergen folge 1262 unterm tannenb as recognized adventure as skillfully as experience just about lesson amusement as with ease as deal can be gotten by just checking out a books

bergen in doktorundan kan donduran itiraf türkiye gazetesi - Jan 29 2022

web mar 14 2022 bergen in yüzünün kezzapla yakıldığı dönemde tedavi için gittiği doktor onur Ünlü beyaz tv de yayınlanan söylemezsem olmaz programına katılarak kan donduran açıklamlar yaptı

notarztin andrea bergen folge 1262 unterm tannenb pdf - Feb 27 2022
web notarztin andrea bergen folge 1262 unterm tannenb pdf reviewing notarztin andrea bergen folge 1262 unterm tannenb pdf unlocking the spellbinding force of linguistics in a fast paced world fueled by information and interconnectivity the spellbinding force of linguistics has acquired newfound prominence
notarztin andrea bergen folge 1262 unterm tannenb pdf - Jul 03 2022
web notärztin andrea bergen 1262 jun 26 2023 lass mich raus gregor bitte verzweifelt hämmert die hübsche anna gegen die tür des badezimmers doch dahinter bleibt alles still dr gregor borger hat das haus bereits verlassen und ist
notärztin andrea bergen 1262 unterm tannenbaum geboren - Jan 09 2023
web lass mich raus gregor bitte verzweifelt hämmert die hübsche anna gegen die tür des badezimmers doch dahinter bleibt alles still dr gregor borger hat das haus bereits verlassen und ist in seinem schweren wagen zornig davongebraust längst ist er auf dem weg zu seiner frau simone und zu der weihnachtsfeier im trauten familienkreis
notärztin andrea bergen folge 1262 overdrive - May 13 2023
web dec 9 2014 notärztin andrea bergen folge 1262 ebook mid unterm tannenbaum geboren notärztin andrea bergen by kaja stern
notärztin andrea bergen folge 1262 unterm tannenbaum - Jul 15 2023
web andrea bergen folge 1262 unterm tannenbaum geboren by kaja stern that we will surely offer when folks should go to the electronic bookstores investigate commencement by store aisle by aisle it is in point of certainly problematic this notärztin andrea bergen folge 1262 unterm
notarztin andrea bergen folge 1262 unterm tannenb pdf pdf - Jun 02 2022
web notarztin andrea bergen folge 1262 unterm tannenb pdf introduction notarztin andrea bergen folge 1262 unterm tannenb pdf pdf the praise of folly desiderius erasmus 1913 eating nature in modern germany corinna treitel 2017 04 27 adolf hitler was a vegetarian and the dachau concentration camp had an organic herb garden
notarztin andrea bergen folge 1262 unterm tannenb pdf pdf - Oct 06 2022
web notarztin andrea bergen folge 1262 unterm tannenb pdf is available in our digital library an online right of entry to it is set as public correspondingly you can download it instantly
notärztin andrea bergen folge 1262 unterm tannenbaum - Jun 14 2023
web notärztin andrea bergen folge 1262 unterm tannenbaum geboren by kaja stern author eckhard herbig from magazine mediamarkt nl subject notärztin andrea bergen folge 1262 unterm tannenbaum geboren by kaja stern keywords andrea unterm 1262 by stern bergen notärztin tannenbaum folge kaja geboren created
nur tuğba namlı apar topar hastaneye kaldırıldı hakan ural son - Dec 28 2021

web jun 22 2022 neler oluyor hayatta programında sunuculuk yapan nur tuğba namlı sağlık sorunları yaşarken bir anda hastaneye kaldırıldı programdaki partneri hakan ural bütün gerçekleri açıkladı İşte detaylar

notärztin andrea bergen folge 1262 unterm tannenbaum - Aug 16 2023

web notärztin andrea bergen folge 1262 unterm tannenbaum geboren by kaja stern dream networkonair com author laurenz schierokauer dream networkonair com subject notärztin andrea bergen folge 1262 unterm tannenbaum geboren by kaja stern dream networkonair com keywords notärztin andrea bergen folge 1262 by kaja stern

notarztin andrea bergen folge 1262 unterm tannenb book - Nov 07 2022

web holl notärztin andrea bergen hier bekommen sie alle und das zum günstigen angebotspreis dieser sammelband enthält die folgenden romane chefarzt dr holl 1783 vor angst gelähmt notärztin andrea bergen 1262 unterm tannenbaum geboren dr stefan frank 2216 gemeine lügen dr karsten fabian

notärztin andrea bergen folge 1262 unterm tannenbaum - Dec 08 2022

web dec 9 2014 lass mich raus gregor bitte verzweifelt h 228 mmert die h 252 bsche anna gegen die t 252 r des badezimmers doch dahinter bleibt alles still dr gregor borger hat das haus bereits verlassen und ist in seinem schweren wagen zornig davongebraust l 228 ngst ist er auf dem weg zu seiner

notärztin andrea bergen folge 1262 unterm tannenbaum - Mar 11 2023

web notärztin andrea bergen folge 1262 book read reviews from world s largest community for readers lass mich raus gregor bitte verzweifelt hämmert

notärztin andrea bergen folge 1262 apple books - Feb 10 2023

web notärztin andrea bergen folge 1262 kaja stern 2 99 2 99 publisher description lass mich raus gregor bitte verzweifelt hämmert die hübsche anna gegen die tür des badezimmers doch dahinter bleibt alles still notärztin andrea bergen 1267 2015 notärztin andrea bergen 1268 2015 more ways to shop find an apple store or

inta c grale le da c clic tomes 1 a 4 wrbb neu - Jul 13 2023

web le da c calogue inta c grale pdf copy gestudy byu edu et pour aatre vraiment complet on y savoure a c galement de la tm humour noir des blagues sur les people le

collection inta c grale et universelle des orateurs sacra c s du - Aug 02 2022

web collection inta c grale et universelle des orateurs sacra c s du premier ordre vol 64 contenant les a uvres oratoires complates du p de marolles les a uvres complates

le da c calogue inta c grale f stuart chapin copy - Feb 08 2023

web le da c calogue inta c grale le da c calogue inta c grale 2 downloaded from old restorativejustice org on 2021 10 07 by guest of foods the 10th edition includes

le da c calogue inta c grale 2023 - Dec 06 2022
web info acquire the le da c calogue inta c grale colleague that we come up with the money for here and check out the link you could buy lead le da c calogue inta c grale or
in da club feat c black le le song and lyrics by natalac - Dec 26 2021
web listen to in da club feat c black le le on spotify natalac song 2011
le da c calogue inta c grale pdf pdf blueskywildlife com - May 11 2023
web descuidar la uva de mesa que ayuden a optimizar la viticultura el libro incorpora además algunas reflexiones que pueden servir de base y orientación para el futuro desarrollo de
le da c calogue inta c grale copy ponsonby co - Jan 07 2023
web ease you to look guide le da c calogue inta c grale as you such as by searching the title publisher or authors of guide you in point of fact want you can discover them
collection inta c grale et universelle des orateurs sacra c s du - Apr 29 2022
web collection inta c grale et universelle des orateurs sacra c s du premier ordre vol 41 savoir bourdaloue bossuet fa c nelon massillon contenant les sermons et pana
la folle du sacra c coeur inta c grale download only - Jan 27 2022
web la folle du sacra c coeur inta c grale l inta c grale corse 2023 cyberlab sutd edu sg dec 20 2022 web l inta c grale corse compact oxford italian dictionary aug 30 2022 a
important dates academic calendar delgado community - Nov 24 2021
web aug 9 2021 march 19 august 9 fall 2021 semester registration 6 friday deadline to submit academic suspension appeals 9 10 monday tuesday college faculty staff
collection inta c grale et universelle des orateurs sacra c s du - Nov 05 2022
web collection inta c grale et universelle des orateurs sacra c s du premier ordre savoir bourdaloue bossuet fa c nelon massillon vol 29 collection a galement inta
le da c calogue inta c grale pdf trilhoscacao - Oct 04 2022
web le da c calogue inta c grale pdf when people should go to the ebook stores search introduction by shop shelf by shelf it is truly problematic this is why we give the book
collection inta c grale et universelle des orateurs sacra c s du - May 31 2022
web collection inta c grale et universelle des orateurs sacra c s du premier et du second ordre vol 8 et collection inta c grale ou choisie de la plupart des orateurs du
le da c calogue inta c grale pdf luther h dyer full pdf - Jun 12 2023

web jul 3 2023 de aquella más exigua generada en chile con énfasis en lo vitivinícola sin descuidar la uva de mesa que ayuden a optimizar la viticultura el libro incorpora

le da c calogue inta c grale pdf pdf voto uneal edu - Apr 10 2023

web le da c calogue inta c grale pdf this is likewise one of the factors by obtaining the soft documents of this le da c calogue inta c grale pdf by online you might not require more

le da c calogue inta c grale pdf linguistischool com - Mar 09 2023

web apr 6 2023 web le da c calogue inta c grale pdf staging friends library web aug 30 2022 le da c calogue inta c grale 2 5 downloaded from staging friends library org on august

le da c calogue inta c grale pdf nigeria university press - Aug 14 2023

web may 27 2023 it is your utterly own become old to put it on reviewing habit among guides you could enjoy now is le da c calogue inta c grale pdf below a dictionary of the

İngilizce bağlaçlar ve edatlar İngilizce Öğrenme konuşarak - Feb 25 2022

web at de da manasına gelmekte zamanların önünde ve bir yerde bulunduğunuzu içinde olmak zorunda değil anlatmak için kullanılır match will start at 19 30 maç 19 30 da

le da c calogue a mes enfants a la jeunesse goodreads - Sep 03 2022

web le da c calogue book read reviews from world s largest community for readers le da c calogue a mes enfants a la jeunesse signa c delacroix date d

le da c calogue tome 1 le manuscrit copy wrbb neu - Mar 29 2022

web 2 le da c calogue tome 1 le manuscrit 2022 07 21 vols for 1871 76 1913 14 include an extra number the christmas bookseller separately paged and not included in the

lecce 2023 2024 p durumu mackolik com - Jul 01 2022

web serie a 2023 2024 puan durumu sayfasında lecce takımının güncel sezon içinde katıldığı turnuvalardaki sıralamasını görebilirsiniz sezon içerisinde katılmış olunan turnuvalara

inta c grale le da c clic tomes 1 a 4 wrbb neu - Oct 24 2021

web le da c calogue inta c grale pdf nigeria university press sep 15 2022 monstre inta c grale le sommeil du monstre 32 da 2 7 downloaded from staging friends library org