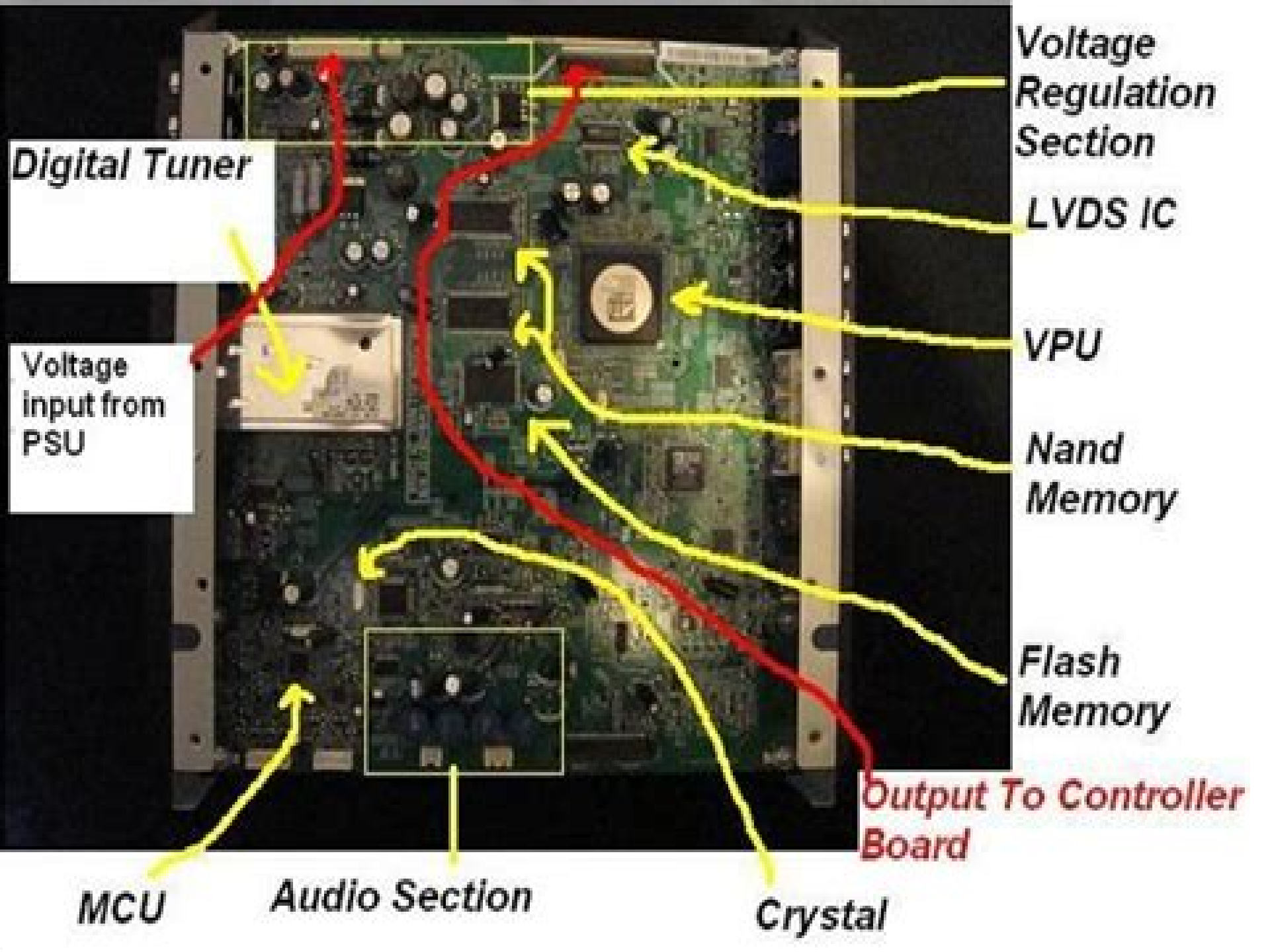
Voltage Regulation Section
Digital Tuner
LVDS IC
VPU
Voltage input from PSU
Nand Memory
Flash Memory
Output To Controller Board
MCU
Audio Section
Crystal

Tv Repair Guide

Edward A. Campbell

Tv Repair Guide:

TV Repair for Beginners Homer L. Davidson,George Zwick,1998 In addition to teaching the basic operation and repair of all standard TV components this revised edition features new sections on universal remote transmitters stereo TV digital controls new color circuits and picture tube sizes and lots of new troubleshooting material It even includes an entire chapter on symptoms and causes for quick troubleshooting and a special section on installing digital satellite receivers **The Howard W. Sams Troubleshooting & Repair Guide to TV** Sams, Howard W., and Co. Staff,1996 Repairing and troubleshooting a television is simple and economical with the help of this book The Howard W Sams Troubleshooting Repair Guide to TV is one of the most complete and up to date television repair books available with tips for all makes of TVs and timesaving features Written for novice and professional technicians alike this guide contains easy to follow coverage of television basics "*Mastering TV Repair* T Malekar,2024-04-12 Your Go To Guide for TV Repair Mastery Discover the ultimate solution to your TV repair needs with Mastering TV Repair A Comprehensive Guide to Learning TV Repair in 30 Days This comprehensive guide equips you with the knowledge and skills to become your own TV repair expert in just 30 days Dive into the world of television technology and unleash your potential to fix any issue that arises Dive into TV Repair Basics Embark on your journey to becoming a TV repair maestro by delving into the fundamental concepts of television technology From understanding different types of TVs to deciphering common troubleshooting techniques this section lays a solid foundation for your learning Explore the intricacies of circuit boards power supplies and display panels as you grasp the essence of TV repair Master Advanced Repair Techniques Elevate your TV repair prowess to new heights with advanced techniques tailored for the avid learner Unravel the mysteries behind intricate components such as capacitors transistors and integrated circuits Learn how to diagnose complex issues like screen flickering sound distortion and power failures with confidence With step by step instructions and insightful tips conquer any repair challenge that comes your way Accelerate Your Learning Curve Experience accelerated learning like never before with our proven 30 day mastery plan Follow our structured curriculum designed to optimize your learning curve and maximize your retention Each day is packed with hands on exercises real world scenarios and practical insights to reinforce your understanding By the end of the program you ll emerge as a certified TV repair specialist ready to tackle any repair job with ease Beginner's Guide to TV Repair George Zwick,1979 **Do it Yourself TV Repair Guide** Edward A Campbell,1962 The Complete Do it Yourself TV Repair Guide A. H. Sneddon,1982 **Beginner's Guide to TV Repair** Homer L. Davidson,1985 **TV Troubleshooting and Repair Guide Book** Robert Gordon Middleton,1952 **Troubleshooting & Repair Guide to TV; Second Edition** Howard W. Sams,1997 *Beginner's Guide to T.V. Repair* George Zwick,1971 *Beginner's Guide to TV Repair* Homer L. Davidson,1985 T.v Repair Guide MOHIBB ALI.,1982 **TV Repair Manual** Edward A. Campbell,1954 **TV Repair Book** Edward A. Campbell,1953 Troubleshooting and Repairing Solid-state TVs Homer L. Davidson,1996 This bestselling

television repair book retains all of the impressive features of earlier editions but is now completely revised and up to date ensuring its place as the most comprehensive field guide for solid state TV repair on the market Featuring extensive detailed illustrations and photographs this third edition also contains new flowcharts throughout for on the spot reference Troubleshooting topics include low voltage power supply vertical color and sound picture tube circuits and more 475 illustrations **Resources in Education** ,1981 **Home-call TV Repair Guide** Jay Shane,1970 **Popular Science** ,1963-11 Popular Science gives our readers the information and tools to improve their technology and their world The core belief that Popular Science and our readers share The future is going to be better and science and technology are the driving forces that will help make it better *Popular Mechanics* ,1964-01 Popular Mechanics inspires instructs and influences readers to help them master the modern world Whether it s practical DIY home improvement tips gadgets and digital technology information on the newest cars or the latest breakthroughs in science PM is the ultimate guide to our high tech lifestyle **Business Service Bulletin** ,1954

Unveiling the Magic of Words: A Review of "**Tv Repair Guide**"

In some sort of defined by information and interconnectivity, the enchanting power of words has acquired unparalleled significance. Their ability to kindle emotions, provoke contemplation, and ignite transformative change is truly awe-inspiring. Enter the realm of "**Tv Repair Guide**," a mesmerizing literary masterpiece penned by way of a distinguished author, guiding readers on a profound journey to unravel the secrets and potential hidden within every word. In this critique, we shall delve to the book is central themes, examine its distinctive writing style, and assess its profound impact on the souls of its readers.

https://wwwnew.greenfirefarms.com/results/detail/index.jsp/seven%20deadly%20sins%20my%20pursuit%20of%20lance%20armstrong%20david%20walsh.pdf

Table of Contents Tv Repair Guide

1. Understanding the eBook Tv Repair Guide
    - The Rise of Digital Reading Tv Repair Guide
    - Advantages of eBooks Over Traditional Books
2. Identifying Tv Repair Guide
    - Exploring Different Genres
    - Considering Fiction vs. Non-Fiction
    - Determining Your Reading Goals
3. Choosing the Right eBook Platform
    - Popular eBook Platforms
    - Features to Look for in an Tv Repair Guide
    - User-Friendly Interface
4. Exploring eBook Recommendations from Tv Repair Guide
    - Personalized Recommendations
    - Tv Repair Guide User Reviews and Ratings
    - Tv Repair Guide and Bestseller Lists

5. Accessing Tv Repair Guide Free and Paid eBooks
    - Tv Repair Guide Public Domain eBooks
    - Tv Repair Guide eBook Subscription Services
    - Tv Repair Guide Budget-Friendly Options
6. Navigating Tv Repair Guide eBook Formats
    - ePub, PDF, MOBI, and More
    - Tv Repair Guide Compatibility with Devices
    - Tv Repair Guide Enhanced eBook Features
7. Enhancing Your Reading Experience
    - Adjustable Fonts and Text Sizes of Tv Repair Guide
    - Highlighting and Note-Taking Tv Repair Guide
    - Interactive Elements Tv Repair Guide
8. Staying Engaged with Tv Repair Guide
    - Joining Online Reading Communities
    - Participating in Virtual Book Clubs
    - Following Authors and Publishers Tv Repair Guide
9. Balancing eBooks and Physical Books Tv Repair Guide
    - Benefits of a Digital Library
    - Creating a Diverse Reading Collection Tv Repair Guide
10. Overcoming Reading Challenges
    - Dealing with Digital Eye Strain
    - Minimizing Distractions
    - Managing Screen Time
11. Cultivating a Reading Routine Tv Repair Guide
    - Setting Reading Goals Tv Repair Guide
    - Carving Out Dedicated Reading Time
12. Sourcing Reliable Information of Tv Repair Guide
    - Fact-Checking eBook Content of Tv Repair Guide
    - Distinguishing Credible Sources
13. Promoting Lifelong Learning

    - Utilizing eBooks for Skill Development
    - Exploring Educational eBooks
14. Embracing eBook Trends
    - Integration of Multimedia Elements
    - Interactive and Gamified eBooks

Tv Repair Guide Introduction

Free PDF Books and Manuals for Download: Unlocking Knowledge at Your Fingertips In todays fast-paced digital age, obtaining valuable knowledge has become easier than ever. Thanks to the internet, a vast array of books and manuals are now available for free download in PDF format. Whether you are a student, professional, or simply an avid reader, this treasure trove of downloadable resources offers a wealth of information, conveniently accessible anytime, anywhere. The advent of online libraries and platforms dedicated to sharing knowledge has revolutionized the way we consume information. No longer confined to physical libraries or bookstores, readers can now access an extensive collection of digital books and manuals with just a few clicks. These resources, available in PDF, Microsoft Word, and PowerPoint formats, cater to a wide range of interests, including literature, technology, science, history, and much more. One notable platform where you can explore and download free Tv Repair Guide PDF books and manuals is the internets largest free library. Hosted online, this catalog compiles a vast assortment of documents, making it a veritable goldmine of knowledge. With its easy-to-use website interface and customizable PDF generator, this platform offers a user-friendly experience, allowing individuals to effortlessly navigate and access the information they seek. The availability of free PDF books and manuals on this platform demonstrates its commitment to democratizing education and empowering individuals with the tools needed to succeed in their chosen fields. It allows anyone, regardless of their background or financial limitations, to expand their horizons and gain insights from experts in various disciplines. One of the most significant advantages of downloading PDF books and manuals lies in their portability. Unlike physical copies, digital books can be stored and carried on a single device, such as a tablet or smartphone, saving valuable space and weight. This convenience makes it possible for readers to have their entire library at their fingertips, whether they are commuting, traveling, or simply enjoying a lazy afternoon at home. Additionally, digital files are easily searchable, enabling readers to locate specific information within seconds. With a few keystrokes, users can search for keywords, topics, or phrases, making research and finding relevant information a breeze. This efficiency saves time and effort, streamlining the learning process and allowing individuals to focus on extracting the information they need. Furthermore, the availability of free PDF books and manuals fosters a culture of continuous learning. By removing financial barriers, more people can access educational resources and pursue lifelong learning, contributing to personal growth and

professional development. This democratization of knowledge promotes intellectual curiosity and empowers individuals to become lifelong learners, promoting progress and innovation in various fields. It is worth noting that while accessing free Tv Repair Guide PDF books and manuals is convenient and cost-effective, it is vital to respect copyright laws and intellectual property rights. Platforms offering free downloads often operate within legal boundaries, ensuring that the materials they provide are either in the public domain or authorized for distribution. By adhering to copyright laws, users can enjoy the benefits of free access to knowledge while supporting the authors and publishers who make these resources available. In conclusion, the availability of Tv Repair Guide free PDF books and manuals for download has revolutionized the way we access and consume knowledge. With just a few clicks, individuals can explore a vast collection of resources across different disciplines, all free of charge. This accessibility empowers individuals to become lifelong learners, contributing to personal growth, professional development, and the advancement of society as a whole. So why not unlock a world of knowledge today? Start exploring the vast sea of free PDF books and manuals waiting to be discovered right at your fingertips.

FAQs About Tv Repair Guide Books

What is a Tv Repair Guide PDF? A PDF (Portable Document Format) is a file format developed by Adobe that preserves the layout and formatting of a document, regardless of the software, hardware, or operating system used to view or print it. **How do I create a Tv Repair Guide PDF?** There are several ways to create a PDF: Use software like Adobe Acrobat, Microsoft Word, or Google Docs, which often have built-in PDF creation tools. Print to PDF: Many applications and operating systems have a "Print to PDF" option that allows you to save a document as a PDF file instead of printing it on paper. Online converters: There are various online tools that can convert different file types to PDF. **How do I edit a Tv Repair Guide PDF?** Editing a PDF can be done with software like Adobe Acrobat, which allows direct editing of text, images, and other elements within the PDF. Some free tools, like PDFescape or Smallpdf, also offer basic editing capabilities. **How do I convert a Tv Repair Guide PDF to another file format?** There are multiple ways to convert a PDF to another format: Use online converters like Smallpdf, Zamzar, or Adobe Acrobats export feature to convert PDFs to formats like Word, Excel, JPEG, etc. Software like Adobe Acrobat, Microsoft Word, or other PDF editors may have options to export or save PDFs in different formats. **How do I password-protect a Tv Repair Guide PDF?** Most PDF editing software allows you to add password protection. In Adobe Acrobat, for instance, you can go to "File" -> "Properties" -> "Security" to set a password to restrict access or editing capabilities. Are there any free alternatives to Adobe Acrobat for working with PDFs? Yes, there are many free alternatives for working with PDFs, such as: LibreOffice: Offers PDF editing features. PDFsam: Allows splitting, merging, and editing PDFs. Foxit Reader: Provides basic PDF viewing and editing capabilities. How do I compress a PDF file?

You can use online tools like Smallpdf, ILovePDF, or desktop software like Adobe Acrobat to compress PDF files without significant quality loss. Compression reduces the file size, making it easier to share and download. Can I fill out forms in a PDF file? Yes, most PDF viewers/editors like Adobe Acrobat, Preview (on Mac), or various online tools allow you to fill out forms in PDF files by selecting text fields and entering information. Are there any restrictions when working with PDFs? Some PDFs might have restrictions set by their creator, such as password protection, editing restrictions, or print restrictions. Breaking these restrictions might require specific software or tools, which may or may not be legal depending on the circumstances and local laws.

Find Tv Repair Guide :

seven deadly sins my pursuit of lance armstrong david walsh
~~sfpe handbook of fire protection engineering~~
signature in the cell dna and evidence for intelligent design stephen c meyer
shortcuts in mathematics by akhilesh khare
~~saudi arabia on the edge the uncertain future of an american ally council on foreign relations books potomac books~~
signals and systems 2nd edition solutions
silver legend
scheda analitico descrittiva ais pdf
sejarah lengkap ahlussunnah wal jamaah aswaja islam
sdk api manual net gmbh
self promotion for introverts the quiet guide to getting ahead
shah of shahs
show and tell competition ideas
science test papers ks3 year 7
~~short italian love poems~~

Tv Repair Guide :

ethics theory and practice 11th edition abebooks - Jan 28 2022
web makes ethical ideas accessible to students with a clear presentation ethics theory and practice educates readers about ethical theory and applies concepts to classic and contemporary moral problems lying cheating establishing ethical business

practices honoring ethical obligations in medicine etc this title educates readers about ethical

ethics theory and practice 11th edition pearson - Jul 14 2023

web with a clear presentation ethics theory and practice educates readers about ethical theory and has them apply what they learn to specific classic and contemporary moral problems lying cheating establishing ethical business practices honoring ethical obligations in medicine etc

ethics theory and practice updated edition google books - Nov 06 2022

web nov 26 2014 pearson education nov 26 2014 philosophy 512 pages makes ethical ideas accessible to students with a clear presentation ethics theory and practice educates readers about ethical theory and applies concepts to classic and contemporary moral problems lying cheating establishing ethical business practices honoring

ethics theory and practice updated edition revel access code 11th - Jul 02 2022

web may 4 2016 ethics theory and practice updated edition revel access code 11th edition ethics theory and practice updated edition revel access code 11th edition revel for ethics theory and practice introduces ethical theory and its applications in a way that beginning students can understand

ethics theory and practice google books - Jan 08 2023

web nov 21 2011 ethics theory and practice is utilized by many professors in their ethics courses and i invite you to review the eleventh edition the book is divided into eight chapters of ethical

ethics theory and practice updated edition subscription - Feb 26 2022

web nov 26 2014 rent ethics 11th edition 978 0133770612 today or search our site for other textbooks by jacques p thiroux every textbook comes with a 21 day any reason guarantee published by pearson

ethics theory and practice updated edition rent chegg - Mar 30 2022

web may 16 2016 coupon rent ethics theory and practice updated edition 11th edition 9780134010205 and save up to 80 on textbook rentals and 90 on used textbooks get free 7 day instant etextbook access

ethics theory and practice updated edition 11th edition pearson - Feb 09 2023

web jun 1 2020 ethics theory and practice updated edition 11th edition published by pearson may 31 2020 2017 jacques p thiroux bakersfield college csub emeritus keith w krasemann college of dupage etextbook mo 4 month term pay monthly or pay 39 96 view options revel from 74 99 view options need help get in touch privacy

ethics theory and practice 11th edition thiroux pdf and download - Mar 10 2023

web may 11 2021 ethics theory and practice 11th edition pdf ebook download by jacques p thiroux delivers obvious explanation about moral theory and possesses them utilize what they discover to distinct classic and contemporary practical ethics

ethics theory and practice 11th edition amazon com - Apr 11 2023
web nov 13 2014 with a clear presentation ethics theory and practice educates readers about ethical theory and applies concepts to classic and contemporary moral problems lying cheating establishing ethical business practices honoring ethical obligations in

ethics theory and practice 11th edition exam review - Apr 30 2022
web 1 ethics of conduct what sort of actions should we perform a consequential ism the right action is the one that produces the most good ethical egoism for the agent utilitarianism for everyone b deantology the good is defined independently of the right kantianism actions must satisfy the categorical imperative

ethics theory and practice updated edition pearson - Aug 15 2023
web jul 13 2021 ethics theory and practice updated edition 11th edition published by pearson july 13 2021 2015 jacques p thiroux bakersfield college csub emeritus keith w krasemann college of dupage best value etextbook mo revel from 74 99 pearson subscription 4 month term pay monthly or pay undefined buy now instant

ethics theory and practice updated edition google books - Dec 07 2022
web mar 23 2016 ethics theory and practice introduces ethical theory and its applications in a way that beginning students can understand delivering a balanced overview of the discipline authors

ethics theory and practice updated edition books a la carte 11th - May 12 2023
web may 26 2016 ethics theory and practice updated edition books a la carte 11th edition 11th edition by jacques p thiroux author keith w krasemann author 4 3 4 3 out of 5 stars 213 ratings

ethics theory and practice updated edition 11th edition - Aug 03 2022
web ethics theory and practice updated edition 11th edition author s jacques p thiroux keith w krasemann publisher pearson format fixed what s this print isbn 9780133804058 0133804054 etext isbn 9780133770612 0133770613 edition 11th copyright 2015 74 99 usd 9780133770612 buy etextbook lifetime 74 99 savings

ethics theory and practice updated edition 11th edition - Oct 05 2022
web jul 14 2021 ethics introduces ethical theory and its applications in an approachable manner for beginning students it covers both western and non western ethical theories and moral perspectives followed by applied ethics with topics such as euthanasia abortion bioethics and business ethics

ethics theory and practice 11th edition pdf google drive - Jun 13 2023
web ethics theory and practice 11th edition pdf

ethics theory and practice rent 9780133804058 chegg com - Jun 01 2022
web nov 3 2014 covering in depth ethics moral philosophy subjects the writer of ethics theory and practice 11th edition 978

0133804058 worked hard to compose a defining book on the subject of philosophy ethics moral philosophy and associated issues

ethics theory and practice 11th edition pdf book keg - Dec 27 2021

web this book will be filled with real life examples from my decades of experience as an ethics theory and practice 11th edition expert ethics theory and practice 11th edition pdf download this book is for anyone who wants a comprehensive step by step guide to learning the ins and outs of ethics theory and practice 11th edition written by me

ethics theory and practice google books - Sep 04 2022

web with a clear presentation ethics theory and practice educates readers about ethical theory and has them apply what they learn to specific classic and contemporary moral problems lying cheating establishing ethical business practices honoring ethical obligations in medicine etc

what the dog saw and other adventures amazon in - Jul 02 2022

web amazon in buy what the dog saw and other adventures book online at best prices in india on amazon in read what the dog saw and other adventures book reviews author details and more at amazon in free delivery on qualified orders

what the dog saw and other adventures kağıt kapak - Aug 03 2022

web what the dog saw and other adventures gladwell malcolm amazon com tr kitap

what the dog saw and other adventures google play - Nov 06 2022

web what the dog saw and other adventures ebook written by malcolm gladwell read this book using google play books app on your pc android ios devices download for offline reading highlight bookmark or take notes while you read what the dog saw and other adventures

what the dog saw and other adventures kindle edition - Mar 10 2023

web oct 6 2009 what the dog saw and other adventures kindle edition by gladwell malcolm download it once and read it on your kindle device pc phones or tablets use features like bookmarks note taking and highlighting while reading what the dog saw and other adventures

what the dog saw and other adventures amazon ae - Apr 30 2022

web buy what the dog saw and other adventures by gladwell malcolm online on amazon ae at best prices fast and free shipping free returns cash on delivery available on eligible purchase

book review what the dog saw and other adventures by - Apr 11 2023

web nov 7 2009 what the dog saw and other adventures by malcolm gladwell 410 pp little brown company 27 99

what the dog saw and other adventures financial times - Sep 04 2022

web oct 19 2009 what the dog saw is a 22 page piece on cesar millan a man insomniac viewers of cable tv know as the dog

whisperer who tackles problem dogs such as bandit a terrorist chihuahua after consulting

what the dog saw and other adventures amazon co uk - Dec 07 2022

web may 6 2010 in these breathtaking intellectual adventure stories covering everything from criminology to ketchup job interviews to dog training malcolm gladwell looks under the surface of everyday life to show how the most ordinary subjects can illuminate the most extraordinary things about us and our world

what the dog saw summary gradesaver - Feb 26 2022

web what the dog saw informs readers how dogs are highly sensitive to human body language it goes further and highlights the importance of training dog owners as a means to also train the dog what the dog saw and other adventures offers a chest full of treasures that brightly shines on their own while different the stories so follow intentional

what the dog saw and other adventures audio gladwell - Jan 08 2023

web what the dog saw and other adventures audio gladwell malcolm amazon com tr kitap

what the dog saw and other adventures amazon ca - Oct 05 2022

web dec 14 2010 now in what the dog saw he brings together for the first time the best of his writing from the new yorker over the same period here is the bittersweet tale of the inventor of the birth control pill and the dazzling inventions of the pasta sauce pioneer howard moscowitz

what the dog saw and other adventures kapak değişebilir - Jun 13 2023

web in these breathtaking intellectual adventure stories covering everything from criminology to ketchup job interviews to dog training malcolm gladwell looks under the surface of everyday life to show how the most ordinary subjects can illuminate the most extraordinary things about us and our world

what the dog saw and other adventures google books - May 12 2023

web gladwell explores the minor geniuses the underdogs and the overlooked and reveals how everyone and everything contains an intriguing story what the dog saw is gladwell at his very best

summary of what the dog saw and other adventures by malcolm gladwell - Dec 27 2021

web summary of what the dog saw and other adventures by malcolm gladwell surprising lessons from little known geniuses what can an iconic advertising campaign

what the dog saw and other adventures what the dog saw - Mar 30 2022

web jan 1 2009 6 what the dog saw unlike almost all animals a dog is a student of human movement they look to you and other dog owners for help rather than judging other dogs they judge the way a human body moves forward or backward face relaxed or not leash

what the dog saw and other adventures paperback - Jan 28 2022

web what the dog saw unlike almost all animals a dog is a student of human movement they look to you and other dog owners for help rather than judging other dogs they judge the way a human body moves forward or backward face relaxed or not leash

what the dog saw and other adventures ebook amazon in - Jun 01 2022

web what the dog saw and other adventures re issue edition kindle edition in what the dog saw malcolm gladwell covers everything from criminology to spaghetti sauce to show how the most ordinary subjects can illuminate the

what the dog saw and other adventures amazon com - Jul 14 2023

web dec 14 2010 what the dog saw unlike almost all animals a dog is a student of human movement they look to you and other dog owners for help rather than judging other dogs they judge the way a human body moves forward or backward face relaxed or not leash

what the dog saw and other adventures gladwell malcolm - Feb 09 2023

web what the dog saw and other adventures gladwell malcolm amazon com tr ana içeriğe atla com tr merhaba giriş yap hesap ve listeler hesap değil misiniz Çıkış yap İadeler ve siparişler alışveri ş sepeti kitaplar git ara merhaba

what the dog saw wikipedia - Aug 15 2023

web what the dog saw and other adventures is the fourth book released by author malcolm gladwell on october 20 2009 the book is a compilation of the journalist s articles published in the new yorker

a bloody good winner life as a professional gambl book - Jun 13 2023

web a bloody good winner life as a professional gambl my life as a foreign country dec 20 2021 in 2003 sergeant brian turner was at the head of a convoy of 3 500 soldiers as

a bloody good winner life as a professional gambl pdf - Apr 11 2023

web a bloody good winner life as a professional gambl 1 14 downloaded from uniport edu ng on june 13 2023 by guest a bloody good winner life as a professional gambl

a bloody good winner life as a professional gambl pdf - Oct 05 2022

web a bloody good winner life as a professional gambl a bloody good winner trespassing through life winners the horses the memories the defining moments

amazon co uk customer reviews a bloody good winner life as - Feb 09 2023

web find helpful customer reviews and review ratings for a bloody good winner life as a professional gambler at amazon com read honest and unbiased product reviews from

a bloody good winner life as a professional gambler google - Dec 27 2021

web since taking the plunge in 1993 dave nevison has made a very good living from backing racehorses he has taken on the

best bookmakers in the world and won in this frank

a bloody good winner life as a professional gambl wrbb neu - May 12 2023

web a bloody good winner life as a professional gambl is available in our digital library an online access to it is set as public so you can get it instantly our books collection hosts

a bloody good winner life as a professional gambl mark paul - Oct 25 2021

web this a bloody good winner life as a professional gambl as one of the most working sellers here will totally be accompanied by the best options to review the myth of

a bloody good winner life as a professional gambl david - Nov 06 2022

web a bloody good winner life as a professional gambl this is likewise one of the factors by obtaining the soft documents of this a bloody good winner life as a professional

a bloody good winner life as a professional gambler - Aug 15 2023

web jun 2 2008 dave nevison is doing every day what thousands of punters dream of doing living the dream of life as a professional gambler since taking the plunge in 1993 nevison has made his living a very good living from backing racehorses he has taken on the

a bloody good winner life as a professional gambler by dave - Dec 07 2022

web item 2 a bloody good winner life as a professional gambler dave nevison used good b a bloody good winner life as a professional gambler dave nevison

a bloody good winner life as a professional gambl pdf - Nov 25 2021

web jul 29 2023 merely said the a bloody good winner life as a professional gambl is universally compatible past any devices to read the blood and the barley angela

a goody life play now online for free y8 com y8 games - Apr 30 2022

web jul 11 2016 a simulation game model on reality experience the second life in goody city do your daily basis activity such as learning piano playing pc games even performing

a bloody good winner life as a professional gambl pdf - Sep 04 2022

web a bloody good winner life as a professional gambl 1 15 downloaded from uniport edu ng on august 1 2023 by guest a bloody good winner life as a professional gambl

a bloody good winner life as a professional gambler - Jul 14 2023

web paperback 3 48 10 used from 0 90 dave nevison is doing every day what thousands of punters dream of doing living the dream of life as a professional gambler since taking

a bloody good winner life as a professional gambler google - Mar 10 2023

web dave nevison is doing every day what thousands of punters dream of doing living the dream of life as a professional gambler since taking the plunge in 1993 nevison has

a goody life play on armor games - Mar 30 2022

web a goody life a free online adventure game brought to you by armor games have a goody life experience the second life in goody city do your daily basis activity such as

a bloody good winner life as a professional gambl pdf - Jun 01 2022

web apr 22 2023 a bloody good winner life as a professional gambl 1 11 downloaded from uniport edu ng on april 22 2023 by guest a bloody good winner life as a

a bloody good winner life as a professional gambl wrbb neu - Jul 02 2022

web to get those all we give a bloody good winner life as a professional gambl and numerous books collections from fictions to scientific research in any way in the

the good life video game wikipedia - Feb 26 2022

web nintendo switch playstation 4 release 15 october 2021 genre s role playing mode s single player the good life is a role playing video game developed by japanese

a bloody good winner life as a professional gambl - Jan 28 2022

web a bloody good winner life as a professional gambl this is likewise one of the factors by obtaining the soft documents of this a bloody good winner life as a professional

amazon co uk customer reviews a bloody good winner life as - Sep 23 2021

web find helpful customer reviews and review ratings for a bloody good winner life as a professional gambler at amazon com read honest and unbiased product reviews from

a bloody good winner life as a professional gambl steve - Aug 03 2022

web you could buy guide a bloody good winner life as a professional gambl or get it as soon as feasible you could quickly download this a bloody good winner life as a

a bloody good winner life as a professional gambler alibris - Jan 08 2023

web buy a bloody good winner life as a professional gambler by dave nevison david ashforth online at alibris we have new and used copies available in 2 editions starting